TermoVana

EN GENERAL INFORMATION - WARNINGS - INSTALLATION - MAINTENANCE

AIR PELLET STOVES

ANNA

ECO DESIGN 2022

★★★★

This product complies with the 4-star class
as per the emission and performance standards
of Italian Legislative Decree no. 186, 7th November 2017

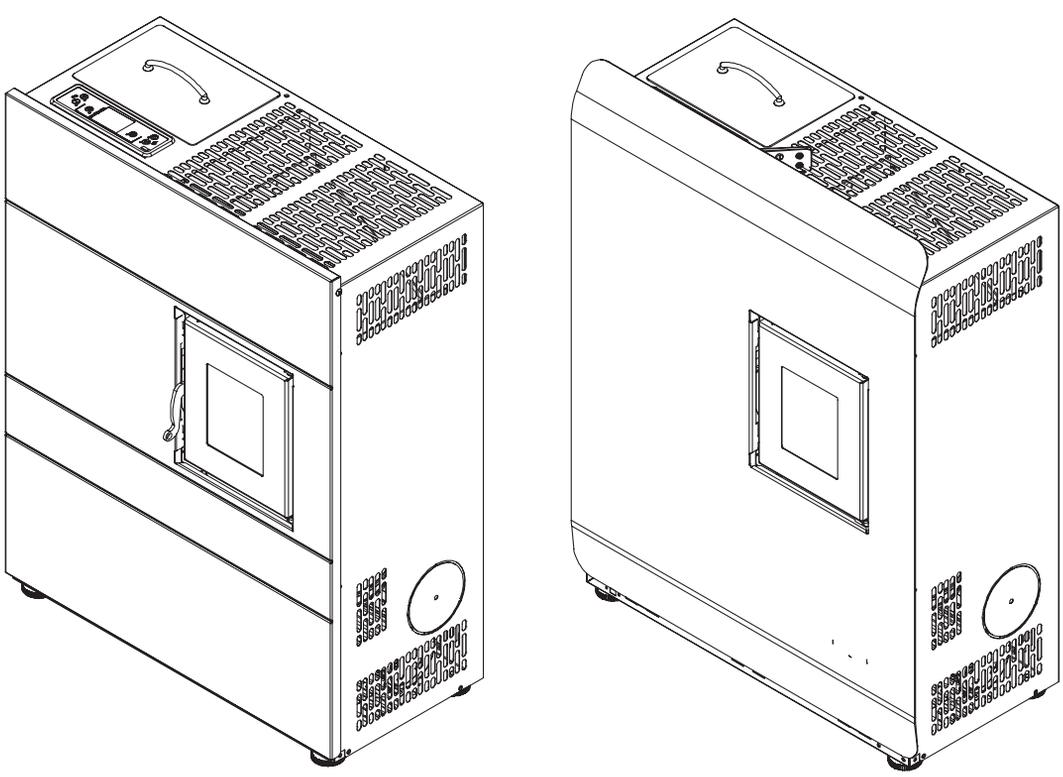

This manual is an integral part of the product.
It is recommended to carefully read the instructions before installation, maintenance or use of the product.
Product images are purely indicative.

EN

Dear Customer,
we wish to thank you for choosing one of our products and we congratulate you on your choice.
In order to help you make the best use of your new stove, we invite you to carefully follow the instructions provided in this manual.

Alexa, turn on the stove

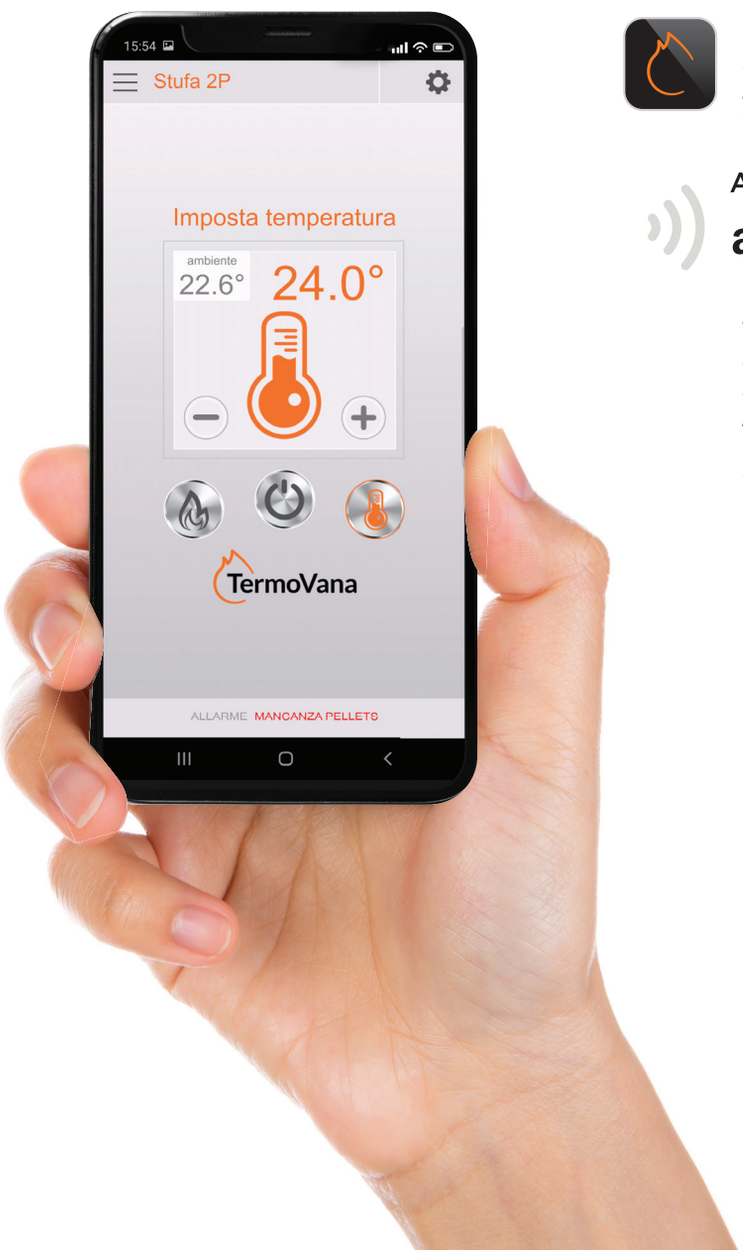

Download the Termovana App and automatically manage your stove by remote

APP TERMOVANA

amazon alexa

Available on the App Store

GET IT ON Google Play

The stoves are supplied ready for the optional Wi-Fi module allowing the automatic management of functions through the Termovana App available on Apple Store and Google Play.
Or else through Amazon Alexa voice commands, and coming soon, Google Home.

INDEX

1 GENERAL INTRODUCTION > *4-6*
1.1 SYMBOLS
1.2 DESTINATION OF USE
1.3 SCOPE AND CONTENTS OF MANUAL
1.4 STORAGE OF MANUAL
1.5 UPDATE OF THIS MANUAL
1.6 GENERAL INFORMATION
1.7 MAIN STANDARDS APPLIED AND TO BE APPLIED
1.8 LEGAL WARRANTY
1.9 MANUFACTURER'S LIABILITY
1.10 CHARACTERISTICS OF THE USER
1.11 TECHNICAL ASSISTANCE
1.12 SPARE PARTS
1.13 IDENTIFICATION PLATE
1.14 STOVE DELIVERY

2 SAFETY WARNINGS > *7-8*
2.1 WARNINGS FOR THE INSTALLER
2.2 WARNINGS FOR THE MAINTENANCE TECHNICIAN
2.3 WARNINGS FOR THE USER

3 CHARACTERISTICS OF FUEL > *9*
3.1 CHARACTERISTICS OF FUEL
3.2 STORAGE OF PELLETS

4 HANDLING AND TRANSPORT > *9*
4.1 REMOVAL FROM TRANSPORT PALLET

5 INSTALLATION > *10-14*
5.1 GENERAL CONSIDERATIONS
5.2 SAFETY PRECAUTIONS
5.3 PLACE OF INSTALLATION OF STOVE
5.4 COMBUSTION AIR
5.5 FLUE GAS EXHAUST PIPE
5.6 STOVE LEVELLING
5.7 CONNECTION TO UTILITIES
5.8 OPTIMISATION OF COMBUSTION
5.9 VENTILATION

6 MAINTENANCE > *15*
6.1 MAINTENANCE

7 DEMOLITION AND DISPOSAL > *16*

8 INITIAL DISPLAY CONFIGURATION > *17*
8.1 CONNECTION TO AN EXTERNAL THERMOSTAT

9 CONTROL PANEL > *17-19*
9.1 USE OF CONTROL PANEL
9.2 PROGRAMMING
9.3 DATE AND TIME
9.4 WEEKLY
9.5 PROGRAMME NUMBER
9.6 DAY OF THE WEEK
9.7 HOUR
9.8 MINUTES
9.9 TEMPERATURE
9.10 REQUESTED PROGRAMME
9.11 PROGRAMME TYPE
9.12 PROGRAMME ENABLING
9.13 EXAMPLE OF PROGRAMMING
9.14 THERMOSTAT MODE
9.15 INTERNAL THERMOSTAT
9.16 OPERATING PARAMETERS
9.17 PELLET LOADING
9.18 FLUE GAS EXTRACTION
9.19 ROOM FAN
9.20 RECENT ERRORS LOG.
9.21 LANGUAGE SELECTION

10 DIAGNOSTIC ERRORS > *20*
10.1 ERROR 1 FAILED IGNITION
10.2 ERROR 2 FLUE GAS EXTRACTION MOTOR FAULT
10.3 ERROR 3 FLUE GAS EXTRACTION CIRCUIT FAULT
10.4 ERROR 4 NOT ACTIVE
10.5 ERROR 5 NO PELLETS
10.6 ERROR 6 PRESSURE SWITCH / THERMOSTAT ALARM
10.7 ERROR 7 NOT ACTIVE
10.8 ERROR 8 NO MAINS POWER
10.9 ERROR 9 FLUE GAS MOTOR ALARM
10.10 ERROR 10 OVERTEMPERATURE ALARM
10.11 ERROR 11 EXPIRY PASSED
10.12 ERROR 12 FLUE GAS PROBE
REMOTE CONTROL (OPTIONAL)

11 PRELIMINARY OPERATIONS > *21*
11.1 PELLET LOADING
11.2 ELECTRICAL POWER SUPPLY
11.3 POWER ON
11.4 POWER OFF
11.5 OPERATION WITH AMBIENT PROBE ON STOVE

TROUBLESHOOTING > *22-23*

12 CLEANING > *24-25*

ID PLATE KEY > *26*

WIRING DIAGRAM > *27*

DESCRIPTION > *28*

TECHNICAL SPECIFICATIONS > *29-31*

REMOVAL FROM PALLET > *32*

MINIMUM DISTANCE FROM COMBUSTIBLE MATERIALS > *32*

DIMENSIONS > *33*

1 GENERAL INTRODUCTION

The product, subject of this manual, was manufactured and tested according to the safety requirements stated in the reference European directives.

This manual is intended for stove owners, installers, users and maintenance personnel of the stove and is an integral part of the product. In case of uncertainty about the content and for any clarification, contact the manufacturer or the authorised technical assistance service, stating the number of the paragraph of the topic in question.

Even partial printing, translation and reproduction of this manual are bound by the authorisation of Delka. Technical information, graphical representations and specifications in this manual may not be disclosed to third parties.

Do not operate unless all information reported in this manual has been perfectly understood; if in doubt, always request the advice or intervention of Delka specialised personnel.

Delka reserves the right to change specifications and technical and/or functional characteristics of the stove at any time without prior warning.

1.1 SYMBOLS

In this manual the points of major importance are highlighted by the following symbols:

☞ **INDICATION**: Indications concerning the correct use of the stove and the responsibilities of the persons responsible.

! **ATTENTION**: The point in which a note of particular importance is expressed.

⚠ **DANGER**: Expresses an important note of behaviour for the prevention of injuries or damage to properties.

1.2 DESTINATION OF USE

! The product referred to by this manual is a fire box for internal domestic heating, powered exclusively by wood pellets with automatic operation.

The stove only works with the fire box door closed.

The door must never be opened during stove operation.

⚠ The appliance is not intended for use by persons (including children) with reduced physical, sensory or mental capacity, or without experience and knowledge, unless they have received instructions relating to the safe use of the appliance and they are under the surveillance of a person responsible for their safety.

⚠ The intended use specified above and the specified stove configurations are the only ones permitted by the manufacturer: only use the stove following the instructions provided.

1.3 SCOPE AND CONTENTS OF MANUAL

The scope of the manual is to provide the essential and basic rules for the correct installation, maintenance and use of the product. Strict compliance with the instructions provided herein ensures a high degree of safety and good operation of the stove.

1.4 STORAGE OF MANUAL

Preservation and consultation

This manual must be carefully stored and must be available at all times for consultation, both on the part of the user that the installation and maintenance personnel.

The installation manual is an integral part of the stove.

Deterioration or loss

If necessary, request a further copy from Delka.

Sale of the stove

In the event of transferring the stove the user is obliged to deliver even this manual to the new owner.

1.5 UPDATE OF THIS MANUAL

This manual reflects the state of the art at the time of placing the stove on the market.

1.6 GENERAL INFORMATION

Information

In case of exchange of information with the Manufacturer of the stove, refer to the serial number and identification data indicated on the product's serial number plate.

Extraordinary maintenance

Extraordinary maintenance operations must be performed by qualified personnel authorised to intervene on the model of stove to which this manual refers.

Responsibility for the works of installation

Delka cannot be held responsible for stove installation works, which are and remain the responsibility of the installer, who is also in charge of performing the necessary inspections on the flue and air intake, as well as ensuring the correctness of the proposed installation solutions. Furthermore, all the safety regulations provided for by the specific legislation in force in the state where the same is installed must be observed.

Use

Use of the stove is also subject, in addition to the provisions contained in this manual, to compliance with all the safety standards required by the specific legislation in force in the state where it is installed.

1.7 MAIN STANDARDS APPLIED AND TO BE APPLIED

A) **Directive 2014/35/EU:** “Electrical equipment designed for use within certain voltage limits’.

B) **Directive 2014/30/EU:** “The approximation of the laws of the Member States relating to electromagnetic compatibility”.

C) **Directive 89/391/EEC:** “Implementation of measures to encourage improvements in the safety and health of workers at work”.

D) **Regulation EU 305/2011:** “Establishes harmonised conditions for the marketing of construction products and repeals Directive 89/106/EEC”.

E) **Directive 1999/34/EC:** “Concerning the rapprochement of the laws, regulations and administrative provisions of the member states with regard to liability for damage caused by defective products”.

F) **Standard EN 14785/2006:** Concerning “Domestic heating appliances supplied with wood pellets - Requirements and test methods”.

1.8 LEGAL WARRANTY

The user, in order to be able to take advantage of the legal warranty, referred to in Directive 1999/44/EC, must strictly observe the provisions contained in this manual and in particular must:

- always operate within the stove’s limits of use;
- always carry out constant and diligent maintenance;
- authorise use of the stove by persons of proven capacity, aptitude and who are adequately trained for the purpose.;
- use original spare parts specific to the stove model.

1.8.1 THE FOLLOWING CIRCUMSTANCES ARE EXCLUDED FROM THE WARRANTY:

- Improper overheating of the appliance, or use of fuels not compliant with the type and quantity indicated in the supplied instructions;
- Any parts found to be defective due to negligence or careless use, incorrect maintenance or installation that does not comply with the manufacturer’s instructions (always refer to the installation and use manual supplied with the appliance);
- Further damage caused by makeshift user interventions in an attempt to solve the initial failure;
- Aggravation of damages caused by continued use of the appliance by the user once the defect has already been manifested;
- Damage caused by transport and/or handling;
- Inefficiency of chimneys, flues, or parts of the system on which the appliance depends.
- Damage caused due to tampering with the device, atmospheric agents, natural disasters, acts of vandalism, electrical discharges, defects in the electrical and/or water system.
- Failure to arrange for the annual cleaning of the stove by an authorised technician or qualified personnel, shall invalidate the warranty.
- Parts subject to normal wear such as gaskets, glass, cast iron cladding and grilles, painted, chrome-plated or gilded details, handles and electrical cables, lamps, luminous indicators, knobs, all parts that can be removed from the fire box;
- Colour variations of painted and or ceramic/coil parts, as well as flaws in the ceramic insofar as these are natural characteristics of the material and use of the product;
- Masonry works;
- Parts of the system (if included) not supplied by the manufacturer.

1.8.2 WARRANTY TERMS:

The company guarantees the product, except for elements subject to normal wear reported below, for a period of 2 (two) years from the date of purchase, which must be proven by:

- valid documentation (invoice and/or tax receipt) showing the name of the vendor and date on which the sale was made;
- the forwarding of the completed warranty certificate within 8 days of the purchase;
- The term warranty implies the free replacement or repair of parts recognised as defective at the origin due to manufacturing defects;
- In order to claim under warranty, in the event of a defect the buyer must keep the warranty certificate and submit it together with the document issued at the time of purchase, to the Technical Assistance Centre;

Moreover, it is necessary to provide:

- a tax receipt with the date of purchase;
- a certificate of conformity of the installation issued by the installer;

Failure to comply with the requirements contained in this manual will imply the immediate cancellation of the warranty.

1.8.3 This warranty does not cover any malfunctions and/or damage to the appliance due to the following causes:

- Any technical interventions on the product to eliminate the aforementioned defects and resulting damage; these must be agreed upon with the Technical Assistance Centre, which reserves the right to accept or reject the relative claim, which in any case will not be carried out under warranty, but rather in the form of technical assistance provided in accordance with any conditions, specifically agreed upon, and in accordance with the rates in force for the works to be carried out;

- The user will also be responsible for any expenses incurred to rectify their own makeshift technical interventions, tampering, or in any case factors that are damaging to the appliance and not attributable to manufacturing defects;
- Without prejudice to the limits imposed by laws or regulations, any guarantee of containment of airborne and noise pollution is also excluded;

The company declines all liability for any damage that may, either directly or indirectly, be inflicted upon persons, animals or property as a consequence of the failure to comply with any of the provisions contained in this manual, in particular in regards to warnings for the installation, use and maintenance of the appliance.

1.9 MANUFACTURER'S LIABILITY

! With the delivery of this manual, Delka declines all responsibility, both civil and criminal, direct or indirect, due to:

- installation not complying with the existing regulations in the country and with the safety directives;
- partial or total non-compliance with the instructions in this manual, in particular those concerning the necessary routine cleaning;
- installation by unqualified and untrained personnel;
- use not in compliance with the safety directives;
- modifications and repairs not authorised by the Manufacturer on the stove;
- the use of non-original or non-specific parts for the stove model;
- insufficient maintenance;
- exceptional events.

1.10 CHARACTERISTICS OF THE USER

! The user of the stove must be an adult and responsible person having the knowledge needed for routine maintenance of the stove components.

⚠ Make sure that children do not come close to the stove, while it is running with the intent to play.

1.11 TECHNICAL ASSISTANCE

Delka provides a dense network of specialist technical assistance centres, trained and prepared directly at the company.

The head office and our sales network is at your disposal to direct you to the nearest authorised service centre.

1.12 SPARE PARTS

Use only genuine spare parts.

Do not wait until the components are worn by use before proceeding to their replacement.

Replace a worn component before its breaking favours the prevention of accidents arising from accidents caused by the sudden breakage of components which may cause serious damages to persons and objects.

Perform periodic maintenance checks as indicated in the "Maintenance" chapter.

1.13 IDENTIFICATION PLATE

The serial number plate on the stove shows all the characteristic data relating to the product, including the Manufacturer's data, the serial number and the marking CE.

1.14 STOVE DELIVERY

The stove is delivered perfectly packed with cardboard or heat-shrinkable sheet and secured to a wooden platform that allows it to be moved using forklift trucks and/or other means.

Inside of the stove there is the following material:

- instruction manual.

2 SAFETY WARNINGS

2.1 WARNINGS FOR THE INSTALLER

Observe the prescriptions contained in this manual.

- The stove removal and installation instructions are reserved to specialist technicians only.
- It is always recommended that users contact our technical assistance service to request qualified technicians. In the case other technicians are involved, it is recommended to verify their actual abilities.
- Responsibility for the works carried out in the location of the machine is, and remains, attributable to the user; the latter is also required to perform checks on the proposed installation solutions.
- The user must comply with all local, national and European safety regulations.
- The appliance must be installed on floors with an adequate load bearing capacity.

⚠ Check that the flue and air intake predispositions conform to the type of installation.

- Do not carry out flying electrical connections with provisional or non-insulated cables.
- Check that the earthing of the electrical system is efficient.
- It is prohibited to install the stove in bedrooms, bathrooms and shower rooms, in rooms where combustible materials are stored and in studio apartments.

  Installation is allowed in studio apartments only with outside air intakes and if properly installed in accordance with regulations;
- Under no circumstances can the stove be installed in rooms where it is exposed to contact with water or splashes of water, as this may cause the risk of burns and short circuits.
- In accordance with fire safety laws, the clearances from flammable or heat-sensitive objects must be respected (sofas, furniture, wood cladding, etc.).
- In the case of highly flammable objects (curtains, carpet, etc.), all these clearances must be increased by 1 metre.

2.1.1 WARNINGS FOR THE INSTALLER

The person in charge of the installation, before starting assembling or disassembling of the stove, must comply with the safety precautions required by law and in particular:

A) do not operate in adverse conditions;
B) must operate in perfect psychophysical conditions and must check that the personal protective equipment, are intact and functioning perfectly;
C) must wear safety gloves;
D) must wear safety shoes;
E) must use electrical insulated tools;
F) must ensure that the area affected by the phases of assembly and disassembly is free from obstacles.

2.2 WARNINGS FOR THE MAINTENANCE TECHNICIAN

⚠ Observe the prescriptions contained in this manual.

- Always use individual safety devices and other means of protection.
- If the floor is made of combustible material, it is recommended to use protection in a non-combustible material (steel, glass) that also protects the front part in the event of any fuel spills during cleaning operations.
- Before starting any maintenance operation, make sure that the stove has cooled down if it has been used.
- If even one of the safety devices is found to be derated or not functioning, the stove should be considered as not functioning.
- Non-specialised users must be prevented from accessing any parts that may expose them to dangers. This person must therefore not be allowed to intervene on internal parts at risk (electrical or mechanical), even if the power needs to be disconnected
- Disconnect the power supply before working on electrical and electronic parts and connectors.

2.3 WARNINGS FOR THE USER

⚠ Do not touch and do not approach the door glass as it could cause burns;

- Do not look at the flame for a long time;
- Do not touch the flue gas exhaust pipe;
- Do not dispose of hot ash (ensure it is completely extinguished and cooled before vacuuming or removing it);
- Do not open the glass door;
- Do not open the ash drawer (where provided);
- Do not touch and do not approach the glass of the door, it could cause burns;
- Do not look at the flame for a long time;
- Do not touch the flue gas exhaust pipe;
- Do not perform any type of cleaning;
- Do not dispose of hot ash (ensure it is completely extinguished and cooled before vacuuming or removing it);
- Do not open the glass door;
- Do not open the ash drawer (where provided);
- Do not use the appliance as a waste incinerator.
- It is prohibited to operate the product with the door open or the glass broken.
- It is prohibited to make unauthorised changes to the appliance.
- Do not use flammable liquids during ignition (alcohol, benzene, oil, etc.).
- After a failed ignition attempt, the accumulated pellets must be emptied from the burn pot before igniting the stove again.
- The pellet tank must always be closed with the lid on.

- Before performing any type of operation, wait for the flame in the combustion chamber to fully drop until it is completely extinguished and cooled, and always detach the plug from the power socket.
- Before performing any type of operation, the user or whoever is operating the product must have read and fully understood the contents of this installation and use manual. Errors or bad settings may cause hazardous conditions and/or irregular operation.
- The only type of fuel that can be used is pellets.
- Do not place laundry on the product to dry. Any clotheslines or similar must be kept at a suitable distance from the product. Fire hazard.
- The electrical cord must never come into contact with the flue gas exhaust pipe or any other part of the stove.
- Packaging materials are NOT toys, they may cause asphyxiation or choking risks and other health hazards! Persons (including children) with reduced physical or motor skills, or who are lacking the necessary experience and knowledge, must be kept away from the packaging. The stove is NOT a toy.
- Children must be constantly supervised to ensure they do not play with the appliance.
- Cleaning and maintenance must be performed by the user and cannot be carried out by children without supervision.
- During operation, the stove reaches high temperatures: keep out of reach of children and animals and use flame-proof personal protective equipment suitable to protect against the heat.
- If the floor is made of combustible material, it is recommended to use protection in a non-combustible material (steel, glass) that also protects the front part in the event of any fuel spills during cleaning operations.

2.3.1 WARNINGS AND RECOMMENDATIONS FOR THE USER

- Observe the prescriptions contained in this manual.
- Respect the instructions and warnings highlighted by the plates displayed on the stove.
- The plates are safety devices, therefore they must always be perfectly legible. If these are damaged and unreadable, it is mandatory to replace them, requesting the original spare parts from the Manufacturer.
- Use only the fuel complying with the indications given in the chapter relating to the fuel characteristics.
- Follow the routine and extraordinary maintenance schedule carefully.
- Do not use the stove without first performing the daily inspection as prescribed in the “Maintenance” chapter of this manual.
- Do not use the stove in case of abnormal operation, suspicion of breakage or unusual noises.
- Do not throw water on the stove in operation or with the intention of extinguishing the fire in the burn pot.
- Do not switch off the stove by disconnecting the mains electrical connection.
- Do not lean on the open door, it could compromise its stability.
- Do not use the stove as a support or anchor of any kind.
- Do not clean the stove until the structure and the ashes have completely cooled down.
- Only touch the door when the stove is cool.
- Perform all operations in maximum safety and when calm.

⚠ In case of a fire, contact the fire brigade.

⚠ In the event of stove malfunction due to non-optimal flue draught, clean it following the procedure described.

! The flue must be cleaned as described in paragraph 6.

! Do not touch the painted parts during operation to avoid damage to the paintwork.

3 CHARACTERISTICS OF FUEL

3.1 CHARACTERISTICS OF FUEL

The pellet (fig. 3.1) is composed of various types of wood, compressed using mechanical processes in accordance with environmental protection laws and is the only type of fuel intended for this type of stove.

The efficiency and thermal potential of the stove may vary depending on the type and quality of the pellets used.

We recommend the use of class A1 pellets (ISO 17225-2, ENplus A1, DIN Plus or NC 444 category "High Performance NF Pellets Biofuels Quality").

The stove is equipped with a pellet holding tank having the capacity indicated in the technical specifications table in section 14.

The loading compartment is positioned in the upper part. It must always be openable in order to load the pellets and must remain closed during stove operation.

⚠ For reasons of operating temperature control traditional wood operation is not possible.

⚠ It is forbidden to use the stove as a waste incinerator.

3.2 STORAGE OF PELLETS

! The pellets must be stored in a dry environment where the temperature is not too cold.

It is recommended to keep a few bags of pellets in the room where the stove is used, or in a nearby place provided the temperature and humidity are acceptable.

Wet and/or cold pellets (5°C) reduce the thermal potential of the fuel resulting in the need for more cleaning maintenance of the burn pot (unburned material) and of the firebox.

! Pay particular attention to the storage and handling of pellet bags. Their crushing and the formation of sawdust must be avoided.

If sawdust is introduced into the stove's tank, this could cause the pellet loading system to become blocked.

Keep the fuel at a safe distance from the stove.

The use of poor quality pellets can compromise the normal operation of the pellet stove and result in forfeiture of the warranty.

fig. 3.1

4 HANDLING AND TRANSPORT

The stove is delivered complete with all the parts provided.

Pay attention to the tendency to unbalance the stove.

The centre of gravity of the stove is moved towards the front.

Bear in mind the above also when moving the stove on the transportation support.

During lifting, avoid jerking or abrupt movements.

Make sure the forklift truck has a capacity greater than the weight of the stove to be lifted.

The full responsibility of the lifting of loads lies on the person handling the lifting equipment.

⚠ Make sure that children do not play with the components of the packaging (e.g. films and polystyrene). Danger of suffocation!

4.1 REMOVAL FROM TRANSPORT PALLET

To remove the stove from the transport pallet, follow the instructions on page 32.

5 INSTALLATION

5.1 GENERAL CONSIDERATIONS

In the following paragraphs there are some guidelines to follow in order to obtain the maximum performance of the product purchased.

The following instructions are nevertheless subject to compliance with any laws and national, regional and municipal regulations in force in the country where the product is installed.

Installation must be performed by qualified personnel in compliance with the UNI 10683 standard.

5.2 SAFETY PRECAUTIONS

The responsibility of the works carried out in the area where the stove will be installed falls, and remains, on the user; the latter is also entrusted with the execution of the inspections related to the installation solutions proposed.

The user must comply with all local, national and European safety regulations.

The appliance must be installed on floors with adequate load bearing capacity.

The stove removal and installation instructions must only be performed by specialist technicians. It is always recommended that users contact our after sale service to request qualified technicians.

In the case other technicians are involved, it is recommended to verify their actual abilities. The person in charge of the installation, before starting assembly or disassembly of the stove, must comply with the safety precautions required by law and in particular with:

A) do not operate in adverse conditions;

B) must operate in perfect psychophysical conditions and must check that the personal protective equipment, are intact and functioning perfectly;

C) must wear safety gloves;

D) must wear safety shoes;

E) must use electrical insulated tools;

F) must ensure that the area affected by the phases of assembly and disassembly is free from obstacles.

5.3 PLACE OF INSTALLATION OF STOVE

On page 32 of this manual, the minimum clearances are shown, expressed in cm, which must be respected when positioning the stove with respect to combustible materials and objects.
Protect all structures which could ignite if exposed to excessive heat.

Floors consisting of flammable material such as for example: wood, parquet, linoleum, laminate or covered with carpets, must be protected by a flame retardant base under the stove, of a sufficient size. This base can be, for example, in steel, pressed slate, glass or stone and must cover the floor in the area below the stove and the flue connecting pipe and must protrude at least 50 cm in front.

The manufacturer declines all responsibility for any variations in the characteristics of the material constituting the floor under the protection.

Any wooden elements (e.g. beams) or combustible materials located near the stove must be protected with fireproof material.

Flammable walls or elements must be kept at a distance of at least 150 cm from the stove.

! Provide a technical space accessible for possible maintenance.

Remember to respect the minimum clearance from flammable materials (x) shown on the ID plate of the pipes used for the chimney (fig. 5.2).

Pi = Flammable wall
Pp = Floor protection

⚠ It is prohibited to install the stove in bedrooms, small rooms and environments having potentially explosive dusts in the atmosphere.

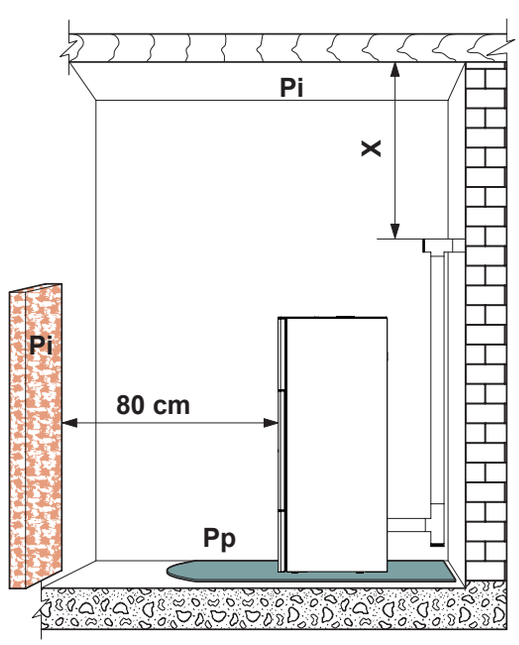

Fig. 5.2

Product images are purely indicative

5.4 COMBUSTION AIR

! During use, the stove withdraws a certain quantity of air from the environment where it is located (except for products in the hermetic series, which can withdraw air directly from the outside); this air must be reintegrated through an external air intake (fig. 5.3 - PA = Air Intake).

If the rear wall of the stove is an external wall, create a hole for suction of the combustion air at a height of approximately 20-30 cm from the ground, respecting the dimensional indications provided in the product technical sheet at the end of the manual.

A non-closable permanent aeration grid must be placed external; in areas that are particularly windy and exposed to weathering, provide rain and wind protection.

Make sure the air intake is positioned so that it is not accidentally obstructed.

If it is impossible to create the external air intake in the rear wall of the stove (non-perimeter wall) a hole must be created in an external wall of the room where the stove is positioned.

If it is not possible to create the external air intake in the room, an external hole can be created in an adjacent room provided it communicates permanently with a transit grille. (fig. 5.4 - C = Box, G = Grille, S = Shutter)

The UNI 10683 standard prohibits the taking of combustion air from garages, combustible material warehouses or activities with the risk of fire.

If there are other heating appliances in the room, the combustion air intakes must guarantee the necessary volume of air for correct operation of all the devices.

In the event that one or more extraction fans (suction hoods) are present and functioning in the room where the stove is located, combustion malfunctions due to the lack of combustion air could occur.

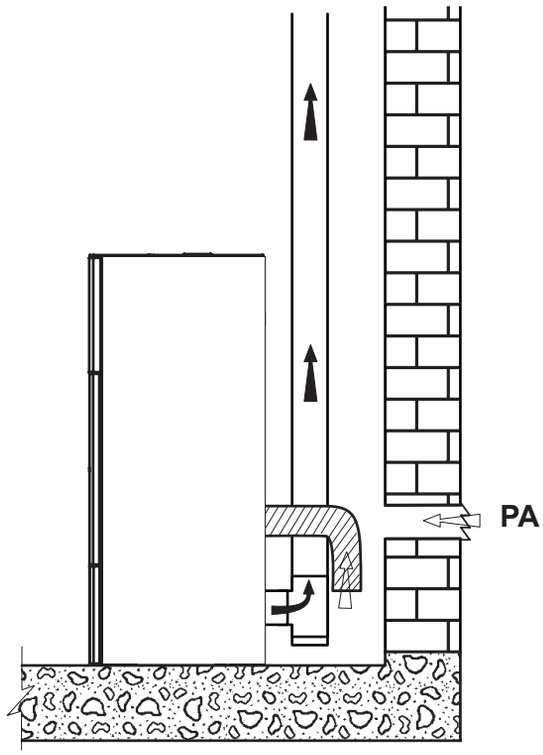

fig. 5.3

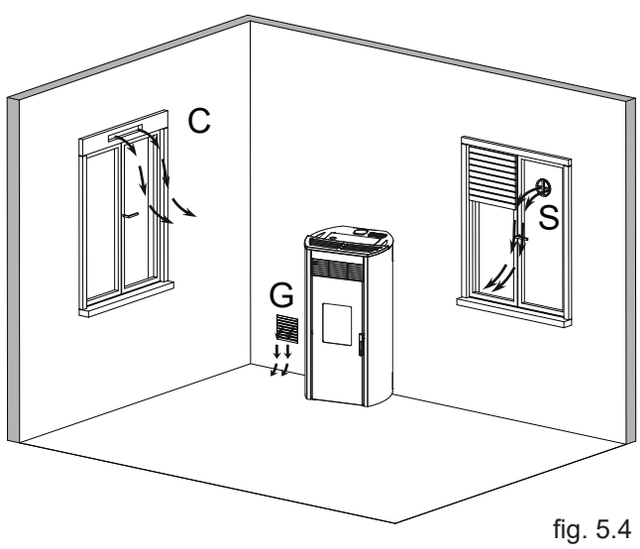

fig. 5.4

Product images are purely indicative

Stoves of the "Hermetic" series

If a pellet stove in the "Hermetic" series is installed, alternatively it is possible to:

- channel the combustion air using a coaxial exhaust pipe for the expulsion of the flue gases and air withdrawal; therefore it is not necessary to create a classic air intake in the room (fig. 5.5 A,B = Air inlet C,D = Flue gas outlet);
- connect the stove's combustible air inlet to the air intake with a suitable duct (fig. 5.6).

5.5 FLUE GAS EXHAUST PIPE

The stove works with the combustion chamber in a vacuum, therefore it is essential to ensure the flue gas exhaust pipe is properly sealed.

The stove must be connected to its own dedicated flue system, suitable in ensuring the proper dispersion of the combustion products in the atmosphere.

The components that make up the flue system must be declared suitable for the specific operating conditions and provided with CE marking.

! It is mandatory to create a first vertical section of a minimum 1.5 meters to guarantee correct expulsion of the flue gases.

It is advisable to make a maximum of 3 changes of direction, in addition to that resulting from the rear connection of the stove to the chimney, using 45-90° bends or T-fittings (fig. 5.7).

Always use a T-fitting with an inspection cap at each horizontal and vertical variation of the flue gas exhaust pipe.

☞ On the first T, at the exit of the flue gas outlet of the stove, it is necessary to connect a pipe at the bottom in order to evacuate any condensate that may form in the chimney (Fig. 5.7a).

The horizontal sections must have a maximum length of 2-3 m with an upward slope of 3-5% (fig. 5.7).

Anchor the pipes with suitable collars to the wall.

The flue gas exhaust connection MUST NOT be connected:

- to a chimney used by other generators (boilers, stoves, fireplaces, etc.);
- to air extraction systems (hoods, vents, etc.) even if "intubated".

It is forbidden to install shut-off and draught valves.

The exhaust of the combustion products must be provided on the roof.

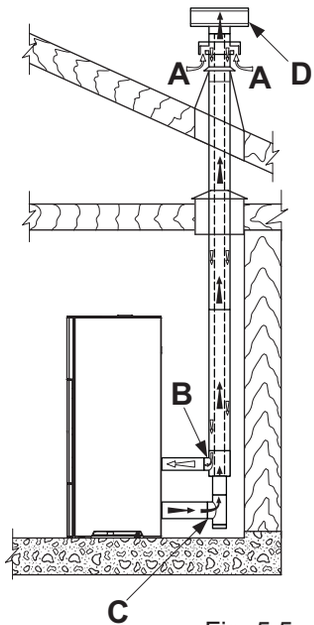

Fig. 5.5

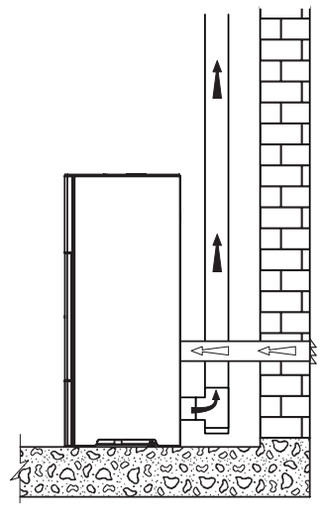

Fig. 5.6

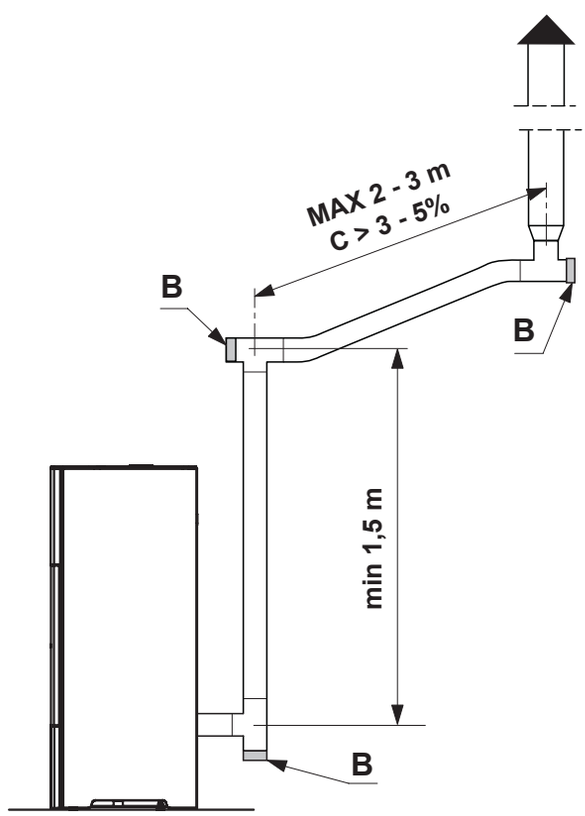

Fig. 5.7

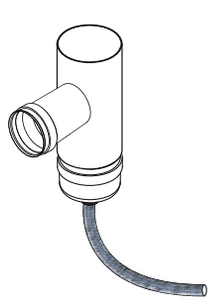

Fig. 5.7a

Product images are purely indicative

Stoves of the "Hermetic" series

If a pellet stove in the "Hermetic" series is installed, it is possible to use a specific coaxial pipe that allows both the expulsion of flue gases and the ducting of the combustion air from the outside (fig. 5.5 A,B=Air inlet C,D=Flue gas outlet).

5.5.1 Roof exhaust with traditional chimney

The flue for the expulsion of flue gases must be developed in compliance with the UNI 10683- EN 1856-1-2- EN 1857- EN 1443- EN 13384-1-3- EN 12391-1 standards both regarding the dimensions and the materials used in its construction.

DILAPIDATED chimneys, made with unsuitable materials (fibrocement, galvanized steel, etc... with rough and porous internal surfaces) are not allowed and compromise the proper operation of the stove.

Flue gases can be released through a traditional chimney (Fig. 5.8) provided the proper maintenance of the chimney is guaranteed;

! For chimneys with a larger section, it is necessary to "intubate" the chimney with steel piping (of a diameter based on the path), which must be properly insulated (fig. 5.9).

Check that the connection to the chimney in masonry is properly sealed.

! In case of pipes that pass through wooden roofs or walls, it is recommended to use special certified ducting kits commonly available on the market.

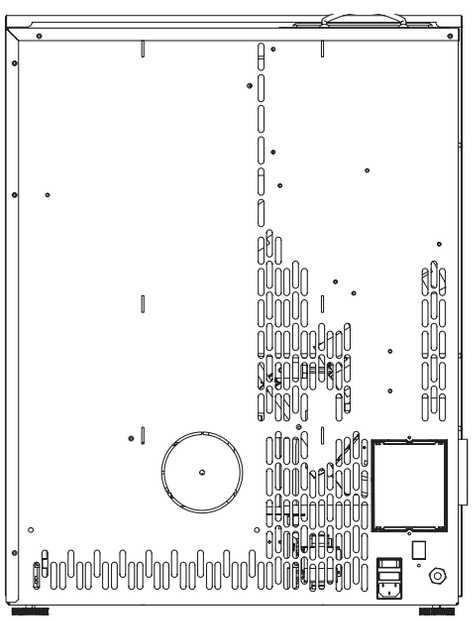

Fig. 5.5.2

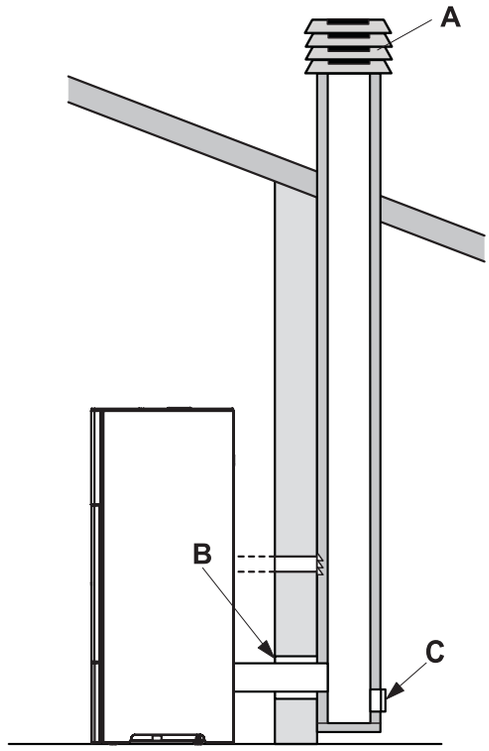

Fig. 5.8

A) Windproof chimney stack
B) Seal
C) Inspection

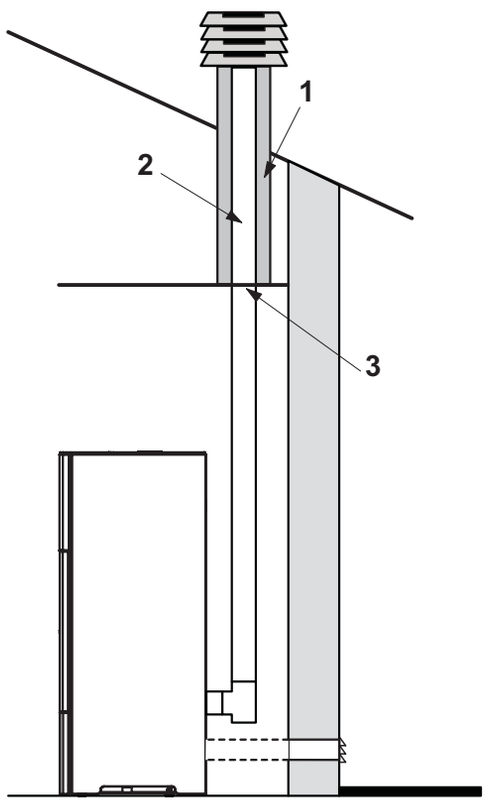

1) Vermiculite and/or rock wool.
2) Steel piping.
3) Closing panel.

Fig. 5.9

Product images are purely indicative

5.6 STOVE LEVELLING

The stove must be levelled, with the help of a spirit level, by regulating the adjustable feet (if included) fig. 5.10).

A B = Spirit Level

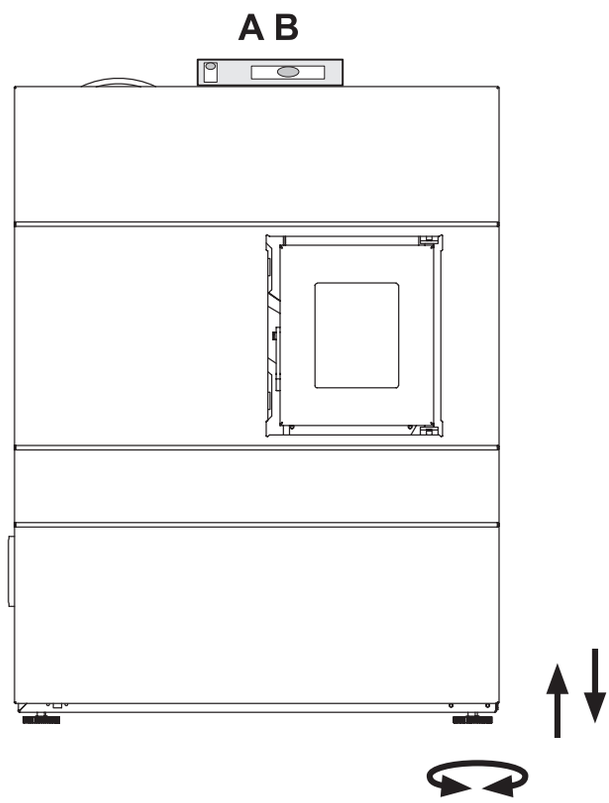

Fig. 5.10

5.7 CONNECTION TO UTILITIES

5.7.1 Electrical connection

It is sufficient to connect the stove to the electrical system using the supplied plug.

The electrical connection (plug) must be easily accessible even after installing the stove.

! If the power cord is damaged, it must be replaced by the technical assistance service or by a qualified technician in order to prevent any risk.

5.7.1.1 Earthing

The system must be earthed and equipped with a differential switch in accordance with legislation in force (fig. 5.11).

! Make sure the power cord does not come into contact with hot parts.

! The flue gas exhaust pipe must have its own earth connection.

5.8 OPTIMISATION OF COMBUSTION

Best combustion depends on a variety of factors (type of installation, operating and maintenance conditions, type of pellets, etc...)

Upon the first ignition, the stove's combustion can be optimised.

Generally speaking, if there is a lot of residue in the burn pot at the end of combustion, it is recommended to adjust the combustion configuration (increasing the value) until the most suitable solution is found.

See sections 9.17- 9.18 - 9.19.

5.9 VENTILATION

The stove is equipped with ventilation.

The air pushed by the fans keeps the appliance at a low enough temperature, thus avoiding excessive stress on the materials of which it is composed.

Do not close the hot air outlet vents with any objects or the stove will overheat!

The stove is not suitable for cooking food.

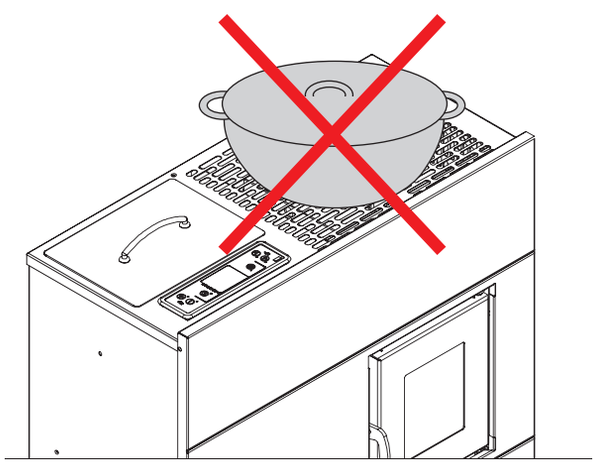

⚠ **ATTENTION: Do not cover the air vents.**

Product images are purely indicative

6 MAINTENANCE

(by an authorised technical assistance centre)

6.1 MAINTENANCE

Maintenance operations must be performed by an authorised technical assistance centre.

Before performing any maintenance operation, take the following precautions:

- Make sure that all the parts of the stove are cold.
- Make sure that the ashes are completely extinguished.
- Use personal protective equipment provided for by Directive 89/391/EEC.
- Make sure that the general line switch is turned off.
- Make sure that the power supply cannot be accidentally reactivated. Remove the plug from the wall socket.
- Always use appropriate equipment for maintenance.
- Once the maintenance or the repair operations are completed, before re-commissioning the stove, install again all the protections and restart all the safety devices.

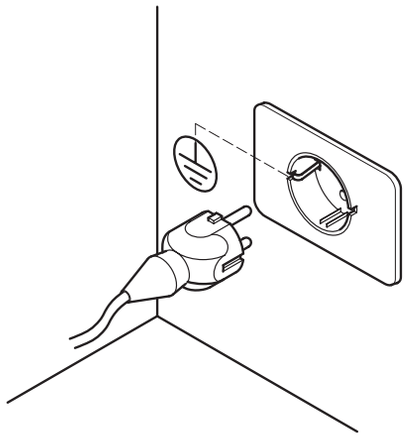

Fig. 5.11

6.1.1 FLUE SYSTEM MAINTENANCE

To be performed at least once a year, or every 40 tons of burned pellets.

If there are horizontal sections, it is necessary to check and remove any ash and soot deposits before they block the passage of the flue gases.

In the event of failure or inadequate cleaning, the stove may have functional problems such as:

- bad combustion
- glass blackening
- blockage of the burn pot with accumulation of ash and pellets
- risk of flue catching fire.

6.1.2 STOVE MAINTENANCE

It must be carried out at least once a year, or each time the stove indicates that maintenance is required.

During the maintenance operation, the technician must:

- clean the flue gas passage area thoroughly and completely;
- check the condition of all the seals and make sure they work properly;
- check the condition of all internal components and make sure they are clean;
- make sure the flue gas outlet connection is sealed and clean;
- remove any deposits of pellet residues in the tank;
- make sure that the stove is working properly;
- reset any warnings or alarms
- for easy access to the smoke compartment (A), simply remove the lid (B) by adjusting the two screws (C) (Fig. 6.1.2).

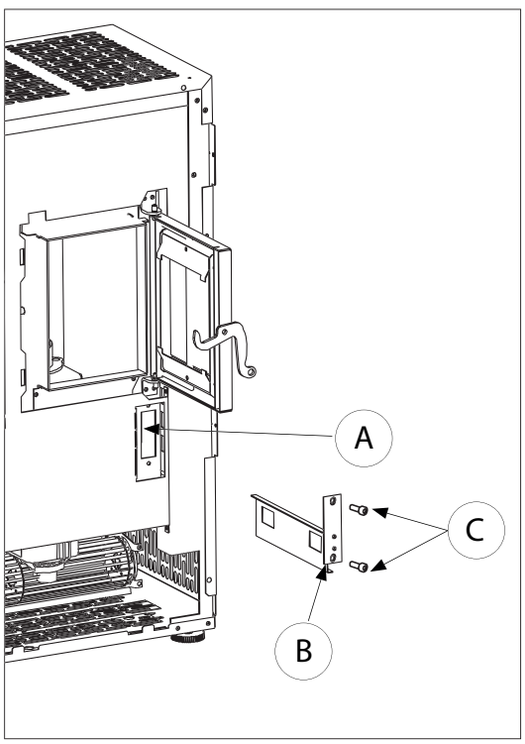

Fig. 6.1.2

6.1.3 GASKET REPLACEMENT

If the gaskets of the fire door, tank or flue gas chamber become worn, they must be replaced by an authorised technician in order to guarantee the proper operation of the stove.

⚠ **ATTENTION: Use only original spare parts.**

Product images are purely indicative

CONTROL AND MAINTENANCE PROGRAMME	EACH IGNITION	EACH WEEK	1 MONTH	1 YEAR (y)
BURN POT	X			
ASH DRAWER		X		
GLASS		X		
ROOM FAN EXTRACTION GRILLE		X		
BOILER			X	
HEATING ELEMENT SLEEVE		X		
EXHAUST MANIFOLD			X	
DOOR AND BURN POT GASKETS*				X
FLUE DUCT*				X
FANS*				X

(*) By an authorised technical assistance centre.

(a) At least once a year or every 4 tonnes of burnt pellets.

7 DEMOLITION AND DISPOSAL

Demolition and disposal of the stove is the exclusive responsibility of the owner who must act in compliance with the laws on safety, respect and protection of the environment, in force in the country where the stove is installed.

Decommissioning and disposal can be entrusted to a third party, provided to always use companies authorised for recovery and elimination of the materials in question.

☞ **INDICATION**: follow always and in any case the regulations in force in the country of installation for the disposal of materials and possibly for the disposal report.

! **ATTENTION**: *All disassembly operations for the demolition must take place with the stove off and the power supply disconnected.*

- remove the entire electric system;
- separate the accumulators in the electronic cards;
- the stove structure can only be demolished by authorised companies;

! **ATTENTION**: *The abandonment of the stove in accessible areas constitutes a serious danger for people and animals.*

Any liability for damage to people and animals always falls on the owner.

At the time of demolition the CE marking, this manual and any other documents relating to this stove should be destroyed.

The crossed out wheelie bin symbol that appears on the label of the appliance indicates that the product at the end of its useful life must be disposed of separately from other waste.

Within the meaning of art.13 of Legislative Decree no. 151 of 25 July 2005 implementing the Directive 2002/96/EC of 23 February 2003 on Waste Electrical and Electronic Equipment relating to the measures and procedures designed to prevent the production of waste electrical and electronic equipment, called WEEE, promoting the reuse, recycling and other forms of recovery so as to reduce the quantity to be disposed of and improving the intervention of the parties involved in the life cycle of such products.

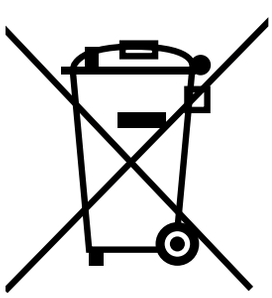

8 INITIAL DISPLAY CONFIGURATION

When the stove is turned on, the display shows the operating status. During the initial start-up, the display shows the stove model and the installed firmware release.

The stove must be powered using the ON/OFF safety switch located at the back; after a few seconds it is ready for ignition.

The stove will modulate its power based on the set ambient temperature, which is detected by the probe on-board the stove.

8.1 CONNECTION TO AN EXTERNAL THERMOSTAT

Function not active in this version.

9 CONTROL PANEL

A - SET User Menu

B - AUTO to enable the weekly programmer

C - ON/OFF and exit from Menu functions

D - Temperature setting + and menu functions

D - Temperature setting – and menu functions

F - Heating programme setting+ and menu functions

G - Heating programme setting – and menu functions

H - Remote control infra-red sensor

I - Alphanumeric 16x2 LCD Display

9.1 USE OF PANEL

Press SET (A) to open the user menu. Scroll the menu using the keys and .
To open the submenu, confirm using the SET (A) key.

1 - Set Date and Time
2 - Weekly programmer setting
3 - Thermostat mode
4 - Stove parameters
5 - Error log
6 - Language selection
7 - Fuel selection

9.2 PROGRAMMING

User programming is possible through the menu, which can be opened by pressing the SET key on the illuminated display panel. To exit the menu at any time without making any changes, press the STOP key. In any case, if the keys are not pressed for about 1 minute, the system will automatically exit the menu to show the stove status. To scroll the various menus use the TEMP+ and TEMP- keys, to open the displayed menu, press SET.

9.3 DATE AND TIME

Press SET to open the incorporated calender setting menu. The day of the week can be changed from Monday to Sunday, as well as the time and date. To switch between the variables, use the PROG+ and PROG- keys, and to change the values, use the TEMP+ and TEMP- keys. To confirm the changes and exit, press the SET key.

9.4 WEEKLY

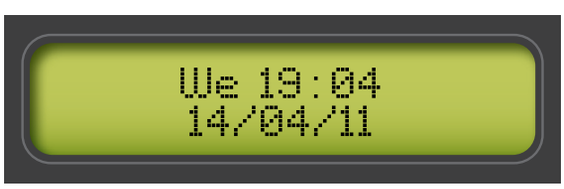

The programmer is only active in the automatic operating mode (AUTO on the display).

There are 15 settable programming levels for on and off times, the temperature and operating programme. Each single programme can be disabled without needing to be cancelled, following a very simple procedure.

Press SET to open and scroll the various programmes, or the TEMP+ and TEMP- keys to scroll the variables to be changed. Then use the PROG+ and PROG- keys to set the requested values.

9.5 PROGRAMME NUMBER

Indicates the selected programme, from 1 to 15.

9.6 DAY OF THE WEEK

Indicates the day of the week of the displayed programme. A setting can be made for each day, from Monday to Sunday (Mo,Tu,We,Th,Fr,Sa,Su) or else for all work days from Monday to Friday (MF), or else for weekends from Saturday to Sunday (SS). This system allows the setting of a single programme to turn the stove on or off every day, from Monday to Friday, at the same time.

9.7 HOUR

Stove on or off hour.

9.8 MINUTES

Stove on or off minutes.

9.9 TEMPERATURE

For ignition programmes, the requested ambient temperature must be set between 5 and 30°C.

9.10 REQUESTED PROGRAMME

For ignition programmes, the requested heating programme must be set between 1 and 5.

9.11 PROGRAMME TYPE

Set either an ignition programme, ON, or power off programme, OFF.

9.12 PROGRAMME ENABLING

This function is essential, because if in the disabled position (No A.) the system will not control the programme and the programme function may not be executed.

9.13 EXAMPLE OF PROGRAMMING

To programme the stove so that it turns on every day from Monday to Friday at 8am at level 4, with a temperature of 20°C, proceed as follows after opening the ignition programme setting.

With TEMP+ select MF as the ignition days from Monday to Friday.

Select the Hour using the PROG+ key and set 08 with the TEMP+ and TEMP- keys.

Select the minutes using the PROG+ key and set 00 with the TEMP+ and TEMP- keys.

Select the temperature using the PROG+ key and set 20° with the TEMP+ and TEMP- keys.

Select the heating power using the PROG+ key and set 4 with the TEMP+ and TEMP- keys.

Select the mode using the PROG+ key and set ON with the TEMP+ and TEMP- keys.

Select the programme type using the PROG+ key and set Enab. with the TEMP+ and TEMP- keys.

Press SET to save the data and insert a new ignition programme. If programming is complete, press STOP to exit.

Remember to set the operating mode to Automatic to enable control of the weekly programmer.

9.14 THERMOSTAT MODE

Press SET to open and modify the operating mode for temperature control or automated ignition and power off.

9.15 INTERNAL THERMOSTAT

Operating mode that regulates stove operation based on the detected ambient temperature. The stove is ignited both manually and automatically by the settings of the incorporated weekly programmer or internal timer. The stove power is automatically controlled based on the set temperature, optimising heating with significant pellet savings.

9.16 OPERATING PARAMETERS

Press SET to open and modify the main stove parameters such as pellet load, flue gas extraction speed, ambient air fan and ambient temperature correction. Using the TEMP+ and TEMP- keys it is possible to change the stove setting percentages to correct its operation based on the pellets used. Then press SET to confirm the modified parameter and save it in the memory. Use the PROG+ and PROG- keys to scroll the parameters.

Press the STOP key to exit the menu.

If the stove is in “Pellet Tuning” automatic mode, the user will not be able to modify the pellet load and flue gas extraction speed because this is automatically managed by the printed circuit board.

9.17 PELLET LOADING

Allows all loading parameters to be increased or decreased in percentage from -50 to +50%.

9.18 FLUE GAS EXTRACTION

Allows all flue gas extraction parameters to be increased or decreased in percentage from -50 to +50%.

9.19 ROOM FAN

Allows all air ventilation parameters to be increased or decreased in percentage from -50 to +50%.

9.20 RECENT ERRORS LOG.

The menu allows the most recent errors recorded by the printed circuit board to be viewed, along with the date and time of the event, as well as a brief description.

9.21 LANGUAGE SELECTION

The menu allows the user to select the language of the panel messages:

Italian

English

French

German

Spanish

Using the PROG+ and PROG- keys it is possible to scroll the various languages and select the desired one.

10 DIAGNOSTIC ERRORS

During operation, if a fault is detected the stove turns off, following the cooling cycle, and an error message is shown on the display, which can only be eliminated manually. Even if in automatic operating mode, the stove waits for the alarm reset command indicating that the fault has been acknowledged. Following is a list of the possible errors:

10.1 ERROR 1 FAILED IGNITION

If after an ignition cycle, the stove does not reach the minimum operating temperature, the cycle ends with an error and the system proceeds with scheduled cooling. This may be due to a lack of fuel, dirty burn pot or dirty or defective igniter. Before re-igniting, check the burn pot, clean it if necessary and empty any pellets therein.

10.2 ERROR 2 FLUE GAS EXTRACTION MOTOR FAULT

If during operation, the flue gas extraction motor does not maintain the programmed speed, the cycle ends with a system error and proceeds with scheduled cooling. (only if extraction sensor included).

10.3 ERROR 3 FLUE GAS EXTRACTION CIRCUIT FAULT

If during operation the system detects insufficient air extraction, the cycle ends with a system error and proceeds with scheduled cooling. This error is common for use with both a pressure gauge and extraction sensor (only if extraction sensor included).

10.4 ERROR 4 NOT ACTIVE

10.5 ERROR 5 NO PELLETS

If during operation the combustion chamber temperature drops below the set limit. The cycle ends with a system error. This may be due to a lack of fuel or the blocked distribution of the fuel.

10.6 ERROR 6 PRESSURE SWITCH / THERMOSTAT ALARM

If the pressure gauge is activated due to insufficient vacuum of the flue gas extraction, the cycle stops heating with error 6. This may be caused by the obstruction of flue gas extraction or expulsion.

If the tank temperature increases by 57/63°C, the stove turns off and error 6 appears on the display.

Once the temperature has dropped below the minimum limit, consent for operation is once more activated, but as a precautionary measure, prior to each ignition following an error, always check the causes and then restore them.

10.7 ERROR 7 NOT ACTIVE

10.8 ERROR 8 NO MAINS POWER

If during any stage of stove operation there is a mains power failure, when the power returns, a no mains power alarm is notified and the stove shuts down.

10.9 ERROR 9 FLUE GAS MOTOR ALARM

During the heating stage the flue gas motor is monitored, if its speed falls below a minimum level, the stove goes into error mode due to the malfunction of the flue gas extraction motor and switches directly into cooling mode at maximum speed. This problem may also be due to ash deposited in the flue gas pass and due to insufficient routine maintenance.

10.10 ERROR 10 OVERTEMPERATURE ALARM

This function is enabled through the system parameter 61. The temperature of the printed circuit boards is monitored, and if it exceeds 70 for more than 3 minutes the stove switches into cooling mode due to overtemperature.

10.11 ERROR 11 EXPIRY PASSED

If a stove expiry date has been set, this status is displayed when the stove is turned on. To restore its operation, the relative parameters must be accessed and updated.

10.12 ERROR 12 FLUE GAS PROBE

REMOTE CONTROL (OPTIONAL)

The system is designed for use with the optional IR remote control, which can be installed at any time. The remote control allows the stove to be turned on and off by remote. Before use, the remote control code must be memorised. This operation is carried out directly from the stove panel without the need for any other tools.

CODE MEMORISATION

Press the PROG+ and TEMP+ keys for about 5 seconds, until the message "IR REMOTE CONTROL" is displayed. Now point the remote control toward the panel and press any of the keys present. An acoustic signal will inform the user that the operation was successful. Exit the menu using the STOP key and try to control the stove.

11 PRELIMINARY OPERATIONS

11.1 PELLET LOADING

The first operation to be carried out before turning the appliance on is to fill the tank with fuel (pellets), preferably using a scoop.

! Be careful not to touch the hot parts if fuel refilling is carried out with the stove running.

Do not empty the bag directly into the tank to avoid loading sawdust or other foreign elements that could compromise correct functioning of the stove and to avoid dispersing the pellets outside the tank itself.

☞ Be sure to close the lid of the tank well after loading the pellets. The safety pressure switch (for models with outside air intake) verifies proper closure (fig. 3.1) and sends an alarm if the lid is left open for more than 20 seconds with the stove running.

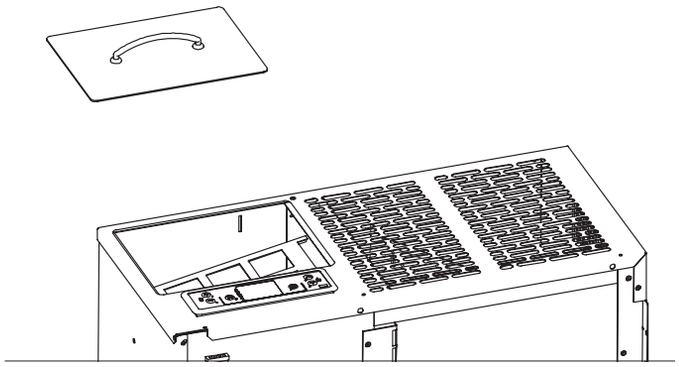

- 3.1 -

⚠ **ATTENTION: Do not insert fuel through the aeration outlets.**

11.2 ELECTRICAL POWER SUPPLY

Connect the stove to the mains power, operate the ON switch on the back of the stove, positioning it to “I” (fig. 3.2). If the connection is properly made, the display will light up.

! During long periods of non-use, it is recommended to position the switch on the back of the machine to OFF (O).

☞ Do not touch the control panel when the stove is being powered.

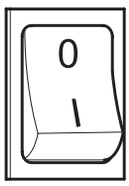

- 3.2 -

11.3 IGNITION

⚠ Before each ignition, make sure that the burn pot is completely empty and correctly positioned in its seat.

To turn on the stove hold the ⏻ key pressed for a few seconds.

⚠ Avoid manually turning on the stove if the automatic ignition system is compromised.

! During initial ignition of the stove it is possible to generate unpleasant smells or fumes caused by the evaporation or drying of some of the materials used. This phenomenon will gradually disappear.

During the first lightings, we recommend that you keep the premises well ventilated.

⚠ Do not pour pellets directly into the burn pot.

STOVES IN THE “HERMETIC” SERIES:
Each time the fire box door and pellet tank door is opened, avoid leaving it open for long periods to prevent the closure sensor from notifying the open door status with an acoustic alarm.

11.4 POWER OFF

To turn off the stove hold the ⏻ key pressed for a few seconds.

☞ It is advisable to wait for the stove to completely cool before re-igniting it again.

⚠ The stove should always be turned off strictly in accordance with the above, and absolutely not by disconnecting it from the mains power.

11.5 OPERATION WITH AMBIENT PROBE ON STOVE

The stove can be switched on/off manually or in a programmed way.

The stove modulates the power depending on the ambient temperature measured by the on-board probe (that is, the stove tries to maintain the desired temperature, consuming as little as possible).

If the user has enabled the “Standby” function, rather than modulate, the stove will turn off when the set temperature is reached, then re-ignite when the ambient temperature falls below the set delta.

The desired ambient temperature can be set using the keys 🌡 ⊕ ⊖ .

PROBLEM	CAUSE	SOLUTION	
The control display won't turn on	The stove is without power	Check that the plug is connected to the mains.	USER
	The safety fuses in the electrical socket are blown	Replace the safety fuses in the electrical socket (3.15A-250V).	TECHNICIAN
	Faulty control display	Replace the control display.	TECHNICIAN
	Faulty flat cable	Replace the flat cable.	TECHNICIAN
	Faulty circuit board	Replace the circuit board	TECHNICIAN
Pellets are not reaching the combustion chamber	Tank empty	Fill the tank.	USER
	Fire door open or pellet door open	Close the fire door and pellet door and check that there are no pellet granules along the gasket.	USER
	Clogged stove	Clean the flue gas chamber.	USER
	Auger blocked by a foreign object (such as nails)	Clean auger.	TECHNICIAN
	Broken auger gearmotor	Replace the gearmotor.	TECHNICIAN
	Check that there are no “ACTIVE ALARMS” on the display	Service the stove.	TECHNICIAN
The flame turns off and the stove stops	Tank empty	Fill the tank.	USER
	Auger blocked by a foreign object (such as nails)	Clean auger.	TECHNICIAN
	Expired pellets	Try other types of pellets.	USER
	Pellet load value too low “PHASE 1”	Adjust the pellet load.	USER TECHNICIAN
	Check that there are no “ACTIVE ALARMS” on the display	Service the stove.	TECHNICIAN

PROBLEM	CAUSE	SOLUTION	
The flames are weak and orange, the pellets don't burn properly and the glass turns black	Insufficient combustion air	Check the following items: any obstructions to the combustion air inlet from the back or under the stove; blocked holes in the burn pot grille and/or too much ash in the burn pot housing, Have the extractor blades and impeller cleaned.	TECHNICIAN
	Blocked exhaust	The flue is partially or totally blocked. Call a flue expert, who will examine the stove exhaust all the way up to the chimney stack. Have it immediately cleaned.	TECHNICIAN
	Clogged stove	Clean the inside of the stove.	USER
	Broken flue gas extractor	The pellets can also burn thanks to the vacuum in the flue, without the aid of the extractor. Have the flue gas extractor immediately replaced. It may be harmful to human health to operate the stove without the flue gas extractor.	TECHNICIAN
The exchanger fan continues to turn even if the stove has cooled	Defective flue gas temperature probe	Replace the flue gas probe.	TECHNICIAN
	Faulty electronic circuit board	Replace the circuit board.	TECHNICIAN
Ash around the stove	Faulty or broken door gaskets	Replace the gaskets.	TECHNICIAN
	Flue gas ducts not sealed	Consult a flue specialist, who will immediately seal the connectors with silicone for high temperatures and/or replace the pipes themselves with new ones that satisfy current regulations. Non-hermetic flue gas ducting may be harmful to human health.	TECHNICIAN
The stove is at maximum power but doesn't heat	Ambient temperature reached	The stove runs at minimum. Raise the desired ambient temperature.	USER
Stove at full power and the display shows "Over temperature flue gases"	Flue gas outlet limit temperature reached	The stove runs at minimum. The problem must be checked by a technician.	TECHNICIAN
The stove's flue gas ducting creates condensate	Low flue gas temperature	Check that the flue is not clogged.	USER
		Increase the reduced stove power (pellet feeding and fan rotation).	USER
		Install condensate collection trays.	TECHNICIAN

12 CLEANING

The cleaning operations can be performed by the user as long as all the instructions given in this manual have been read and understood.

⚠ It is recommended to carry out the cleaning operations with the stove off and cold.

Opening the door

To open the door, use the opening lever wearing

a glove for high temperatures.

Cleaning the inside of the hearth

Daily or before each ignition, it is necessary to check that the burn pot is clean to ensure the free flow of combustion air from the holes of the burn pot itself.

Remove the ash that has accumulated inside the burn pot (fig. 1).

If necessary, remove the ash drawer and empty it out, taking care to remove any residues from the compartment that contains (fig. 1).

☞ Using an ash vacuum can simplify the cleaning operations.

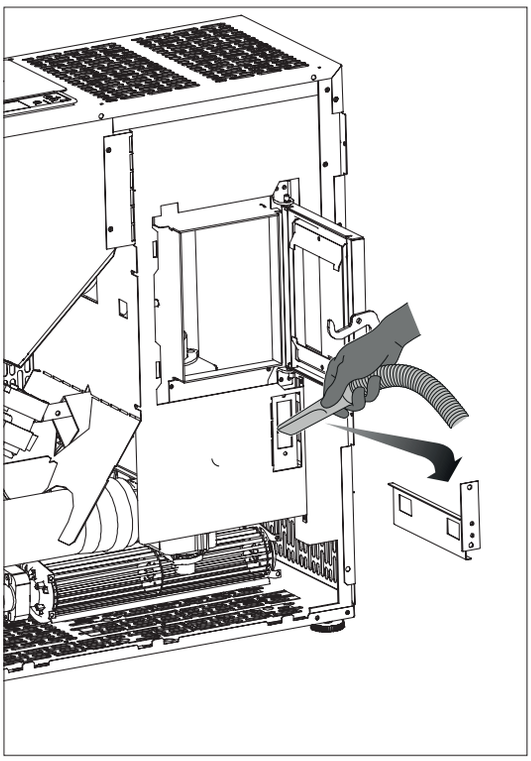

Fig. 1

Cleaning the flue compartment

The flue compartment must be cleaned every 2 months or whenever necessary.

After cleaning the burn pot, remove it and clean the compartment that contains it (fig. 2).

Remove the ash drawer and, using a special ash vacuum, remove any residues in the compartment that contains it.

⚠ CAUTION: to clean the exchanger circuit and flue box, contact a qualified technical assistance centre.

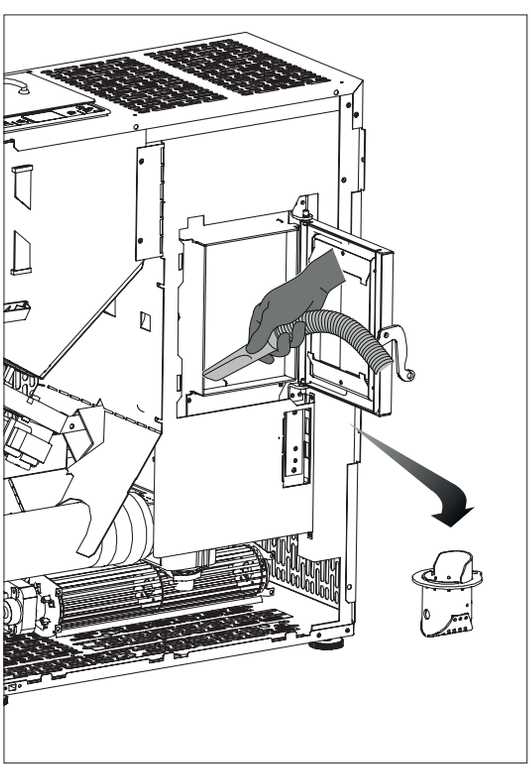

Fig. 2

Cleaning the flue gas circuit

Every 400 kg of pellets burnt, or once per season, the flue gas circuit needs to be cleaned of any residue (fig.3).

Cleaning the glass

It is carried out with a damp cloth or with dampened paper that is wiped over the ash (fig.4).

Rub until the glass is clean.

Do not clean the glass while the stove is on and do not use abrasive sponges.

The fire door glass should be cleaned every day.

Cleaning the flue gas ducting

Every 400 kg of pellets burnt, or once per season, the flue ducts need to be cleaned of any residue.

Once per year, clean any soot using brushes.

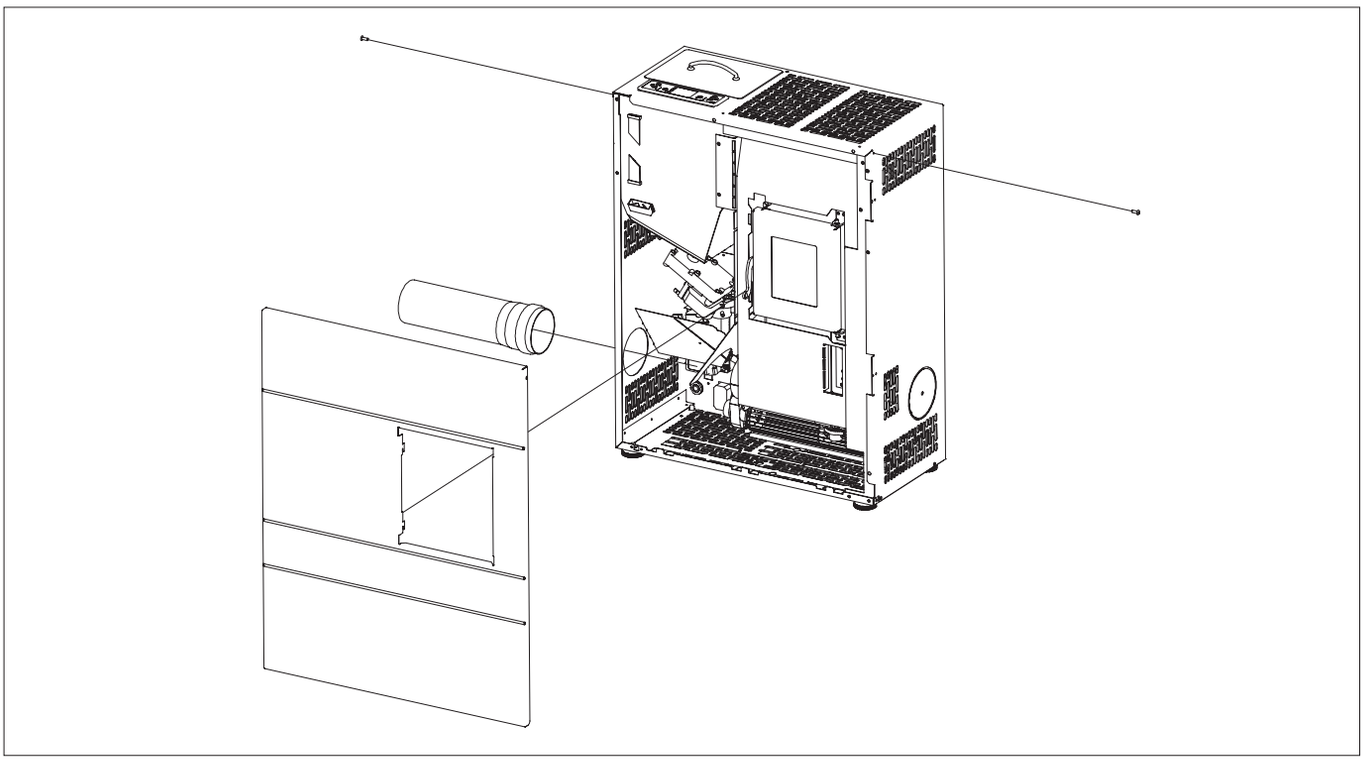

Fig. 3

The cleaning operation must be carried out by a flue specialist, who must clean the duct of any flue gases, the flue and the chimney stack, also checking their efficiency and issuing a written declaration confirming the safety of the system. This operation must be carried out at least once per year.

Cleaning the tank and auger

Each time the pellets are refilled, check for the presence of any dust/sawdust or other scraps on the bottom of the tank. If present, remove it with the help of a vacuum cleaner.

⚠ The hand protection grille must never be removed from its housing. Clean the bottom of the tank and the visible part of the auger.

Cleaning the painted metal parts

Use a damp cloth to clean the painted metal parts. Never use degreasing substances such as alcohol, thinners, acetone, benzene, as these may irreparably damage the paint.

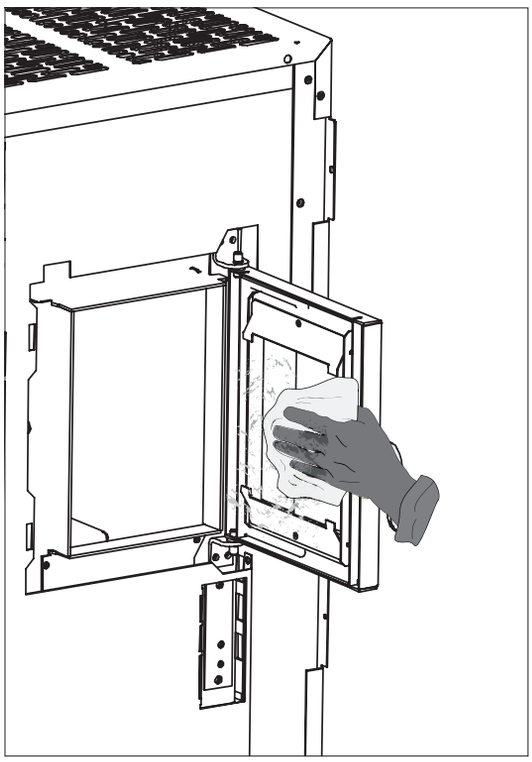

Fig. 4

LEGENDA TARGHETTA MATRICOLA – LEGEND PRODUCT LABEL BESCHREIBUNG TYPENSCHILD - LEGEND ETIQUETTE PRODUIT LEYENDA PLACA DE CARACTERISTÍCAS

ITALIANO	ENGLISH	DEUTSCH	FRANCAIS	ESPAÑOL
Combustibile	Fuel type	Brennstoff	Combustible	Combustible
Potenza termica nominale all'ambiente	Nominal space heat output	Max. Raumnennwärmeleistung	Puissance nominale a l'aìr	Potencia nominal a la aìre
Potenza termica ridotta all'ambiente	Reduced space heat output	Raumteilwärmeleistung	Puissance partielle a l'aìr	Potencia parcial a la aìre
Potenza nominale all'acqua	Nominal heat output to water	Wasserseitig Max. Nennwärmeleistung	Puissance nominale à l'eau	Potencia nominal al agua
Potenza ridotta all'acqua	Reduced heat output to water	Wasserseitig Teilwärmeleistung	Puissance partielle à l'eau	Potencia parcial al agua
Pressione massima di esercizio	Maximum operating waterpressure	Maximaler Betriebsdruck	Pression maximale d'utilisation	Presìon màxima de utilizaciòn
Rendimento alla nominale	Efficiency at nominal heat output	Wirkungsgrad Nennwärmel	Rendement à puissance nominale	Rendimiento a potencia nominal
Rendimento alla potenza ridotta	Efficiency at reduced heat output	Wirkungsgrad Teillast	Rendement à puissance partielle	Rendimiento a potencia parcial
Emissioni di CO alla potenza nominale (13% O_2)	CO emmissions at nominal heat output (13% O_2)	Emissionen bei CO Nennwärmel (13% O_2)	Emissions de CO (réf 13% O_2) à puissance nominale	Emisiones de CO (ref. 13% O_2) a potencia nominal
Emissioni di CO alla potenza ridotta (13% O_2)	CO emmissions at partial heat output (13% O_2)	Emissionen bei CO Teillast (13% O_2)	Emissions de CO (réf 13% O_2) à puissance partielle	Emisiones de CO (ref. 13% O_2) a potencia parcial
Distanza minima da materiali infiammabili	Distance between sides and combustible materials	Mindestabstand zu brennbaren Bauteilen mind.	Distance minimum avec matériaux inflammables	Distancia mínima con materiales inflammables
Tensione	Voltage	Spannung	Tension	Tensión
Frequenza	Frequency	Frequenz	Fréquence	Frecuencia
Potenza Max assorbita in funzionamento	Maximum power absorbed when working	Max. aufgenommene Leistung (Betrieb)	Puissance maximale utilisée en phase de travail	Potencia máxima utilizada en fase de trabajo
Potenza Max assorbita in accensione	Maximum power absorbed for ignition	Max. aufgenommene Leistung (Zündung)	Puissance maximale utilisée en phase d'allumage	Potencia máxima utilizada en fase de arranque
L'apparecchio non può essere utilizzato in una canna fumaria condivisa	The appliance cannot be used in a shared flue	Ofen kann nicht mit andere in ein gemeinsames Kamin funktionieren	L'appareil ne peut pas Être utilisé dans un conduit partagé avec autres appareils	No se puede utilizàr el aparato en canòn compartido
Leggere e seguire le istruzioni di uso e manutenzione	Read and follow the user's instructions	Bedienungsanleitung lesen und befolgen	Lire et suivre le livre d'instruction	Lean y sigan el manual de instruciones
Usare solo il combustibile raccomandato	Use only recommended fuel	Brennstoff verwenden Nur den vorgeschriebenen	Utiliser seulement les combustibles prescrites	Utilizen solamente combustibles otorgados

SCHEMA ELETTRICO - WIRING DIAGRAMS - ELEKTRISCHER SCHALTPLAN SCHÉMA DE CÂBLAGE - DIAGRAMA DE CABLEADO

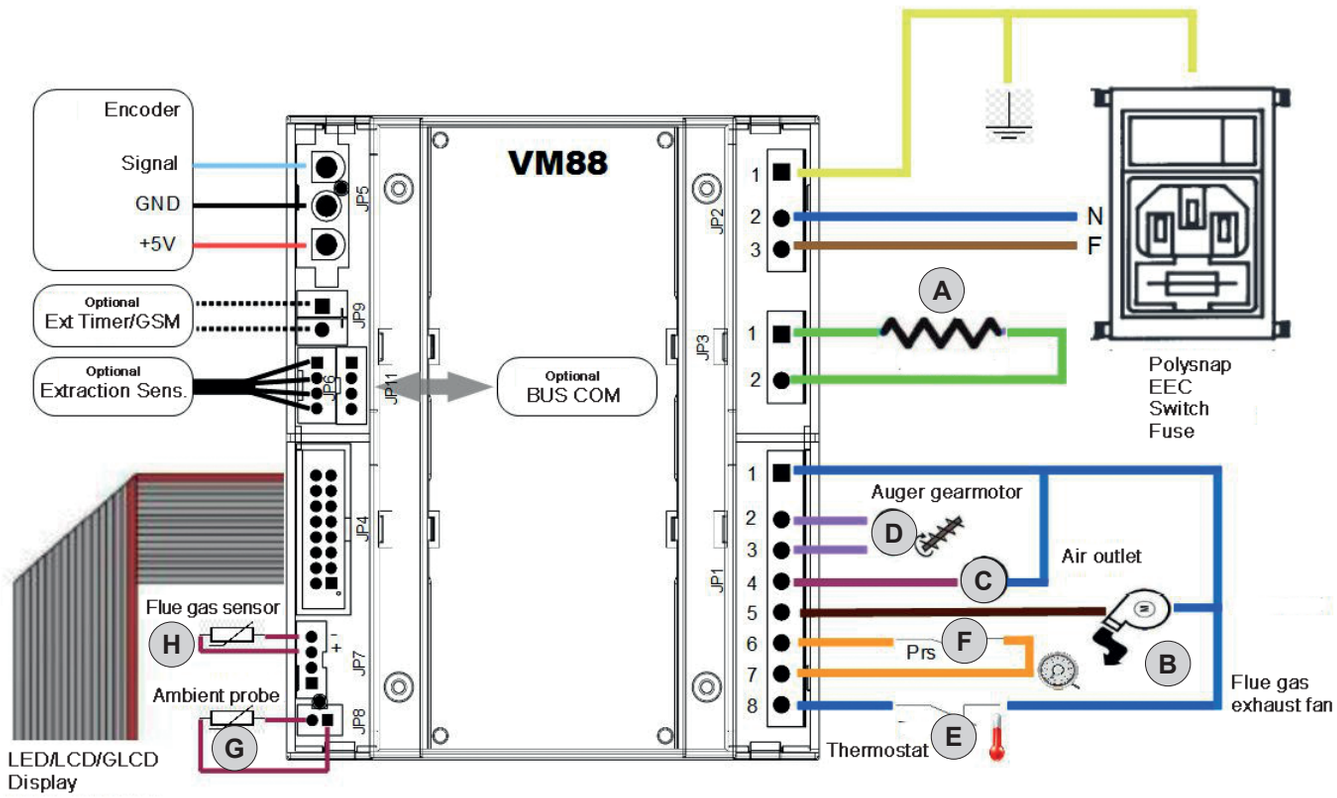

	ITALIANO	ENGLISH	FRANCAIS	DEUTSCH	ESPAÑOL
A	Resistenza ad incandescenza	Igniter	Resistance	Glutwiderstand	Resistencia
B	Ventilatore scarico fumi	Exhaust fan	Extracteur des fumees	Abgasventilator	Turbina expulsion humos
C	Ventilatore ambiente	Room fan	Ventilateur ambiant	Raumluftgeblaese	Ventilador de conveccion
D	Dosatore caricamento	Feeding system	Systeme d'alimentation	Spender	Dosador
E	Termostato di sicurezza	Thermostat	Thermostat	Raumtemperaturregler	Termostato
F	Pressostato	Vacuum switch	Pressostat	Druckwaechter	Presostato
G	Sonda ambiente	Room probe	Sonde ambiant	Raumsonde	Sonda ambiente
H	Sonda fumi	Flue probe	Sonde des fumees	Rauchsonde	Sonda humos

ANNA

DESCRIZIONE - DESCRIPTION - DESCRIPTION - BESCHREIBUNG - DESCRIPCION

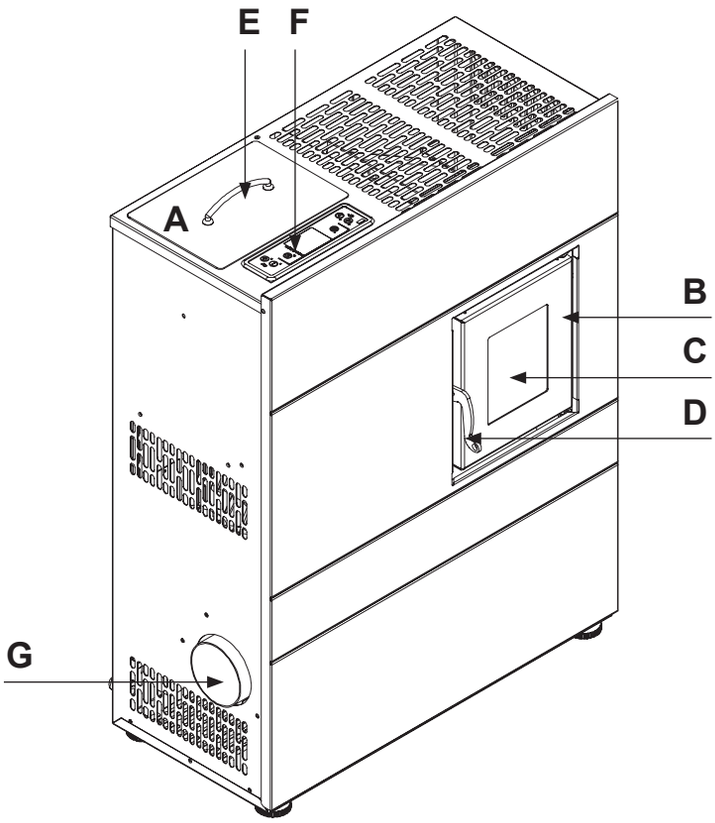

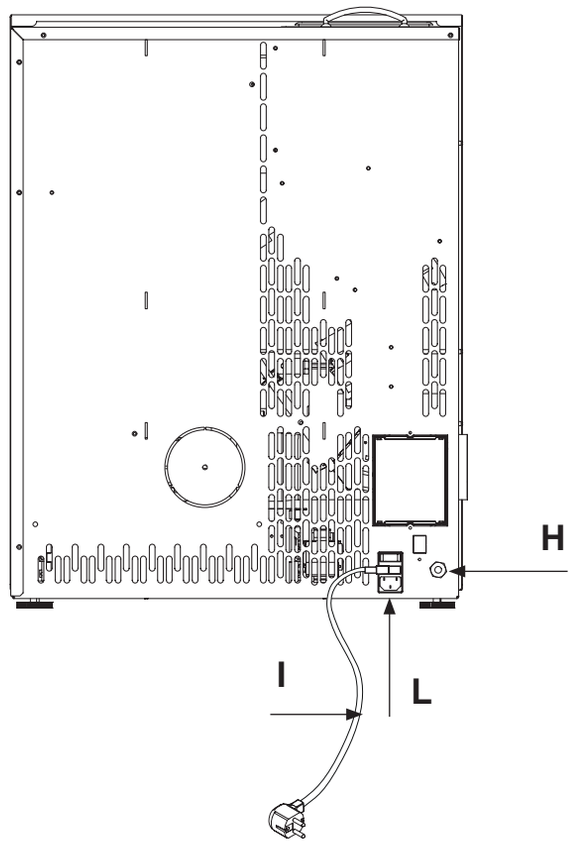

	ITALIANO	ENGLISH	FRANCAIS	DEUTSCH	ESPAÑOL
A	Coperchio serbatoio	Pellet lid	Couvercle du reservoir	Behaelterabdeckung	Tapa del tanque
B	Portina focolare	Firebox door	Porte foyer	Feuertuer	Puerta del hogar
C	Vetro portina	Glass panel	Vitre porte	Glastuer	Vidrio puerta
D	Maniglia di apertura	Handle	Poignee	Handgriff	Manija
E	Serbatoio pellet	Fuel hopper	Reservoir pellet	Behaelter pellet	Tanque pellet
F	Display	Display	Tableau	Bedienung	Panel
G	Tubo di uscita fumi	Flue	Tuyau d'evacuation des fumees	Abgasrohr	Tubo salida humos
H	Sonda ambiente	Probe	Sonde ambiant	Sonde	Sonda ambiental
I	Cavo di alimentazione	Power cord	Cable d' alimentation	Speisekabel	Cable de alimentación
L	Interruttore di accensione	Main switch	Interrupteur general	Steuerung der einschaltzeiten	Interruptor

ANNA

CARATTERISTICHE TECNICHE / TECHNICAL FEATURES / CARACTÉRISTIQUES TECHNIQUES / TECHNISCHE EIGENSCHAFTEN / CARACTERÍSTICAS TÉCNICAS / TEKNISKE SPECIFIKATIONER

	Min	Max
Thermal heat input	2,4 kW	4,7 kW
Overall thermal heat (yield)	2236 kcal/h 2,6 kW	4558 kcal/h 5,3 kW
Yield	91,8 %	87,3 %
Flue gas temperature	108,7 °C	190,7 °C
Flue gas flow rate	2,28 g/s	3,67 g/s
Hourly fuel consumption	0,537 kg/h	1,110 kg/h
Hourly autonomy	14 /h	7 /h
Heating capacity 18/20°C coeff. 0.045 kW	53 m^3	104 m^3
CO emissions (at 13% O_2)	102 mg/Nm^3	83 mg/Nm^3
CO emissions (13% O_2)	0,008 Vol.-%	0,014 Vol.-%
OGC emissions (13% O_2)	2 mg/Nm^3	4 mg/Nm^3
NOx emissions (13% O_2)	142 mg/Nm^3	129 mg/Nm^3
Flue draught	10 Pa	12 Pa
Average powder content (13% O_2)	20 mg/Nm^3	
Dimensions (Width x Depth x Height)	55,5 x 26,1 x 71,6 cm	
Minimum safety clearances (Front – Side – Rear)	100 / 20 / 5 cm	
Flue gas outlet	80 mm	
External air intake	Ø 10 cm	
Fuel	Wood Pellet	
Minimum draught for chimney sizing	0.0 Pa	
Stove suitable for rooms no smaller than	30 m^3	
Feeding tank capacity	8 kg	
Weight	47 kg	
Cross flow fan maximum capacity	240 m^3/h	
Energy rating	**A+**	

REQUISITI ELETTRICI, ELECTRICAL REQUIREMENTS, STANDARDS ÉLECTRIQUES STROMDATEN, REQUISITOS ELÉCTRICOS, STRØMKRAV	
Voltage	230 V
Frequency	50 Hz
Max power absorbed during operation	70 W
Power absorbed at electric ignition	440 W

RIMOZIONE DALLA PALETTA - SCOOP REMOVAL - SCHAUFEL ENTFERNEN PELLET DEPLACEMENT - REMOCION PALETA

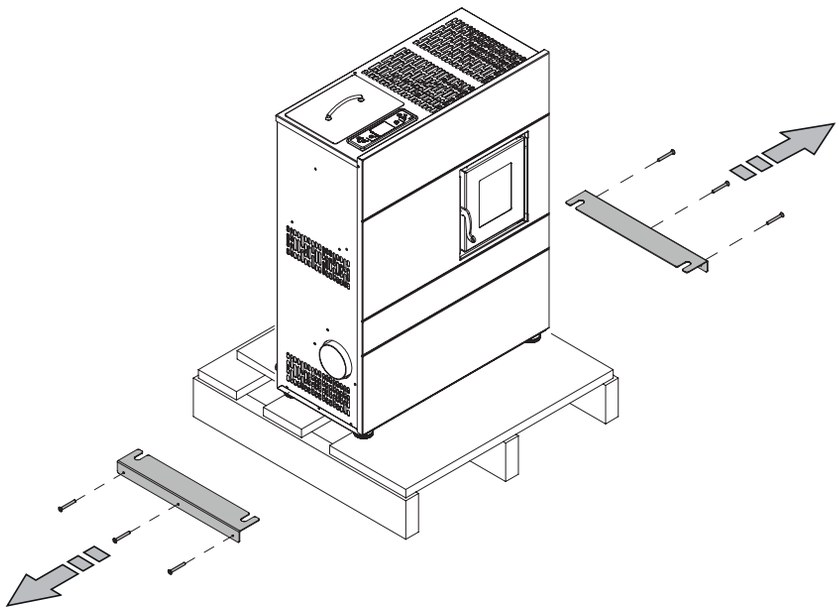

DISTANZA MINIMA DAI MATERIALI COMBUSTIBILI - MINIMUM DISTANCE FROM COMBUSTIBLE MATERIALS MINDESTABSTAND ZU BRENNBAREN MATERIALIEN - DISTANCE MINIMALE À PARTIR DE MATÉRIAUX COMBUSTIBLES DISTANCIA MÍNIMA DE MATERIALES COMBUSTIBLES

	[cm]
X1	100
X2	5
Y1	20
Y2	20
Z	100

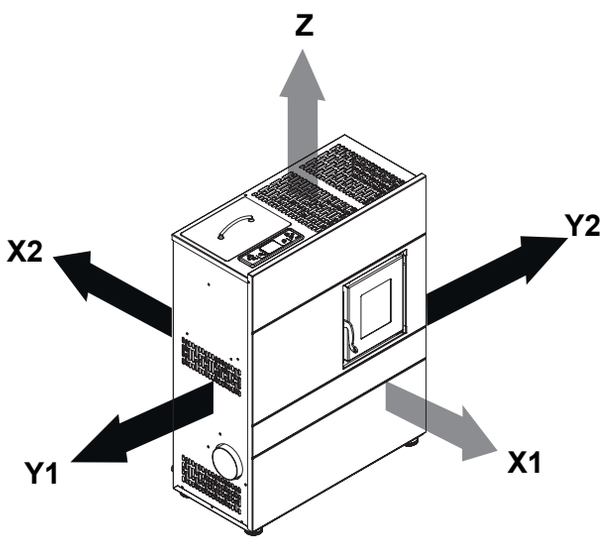

Product images are purely indicative

ANNA

DIMENSIONI - DIMENSIONS - ABMESSUNGEN
DIMENSIONS - DIMENSIONES

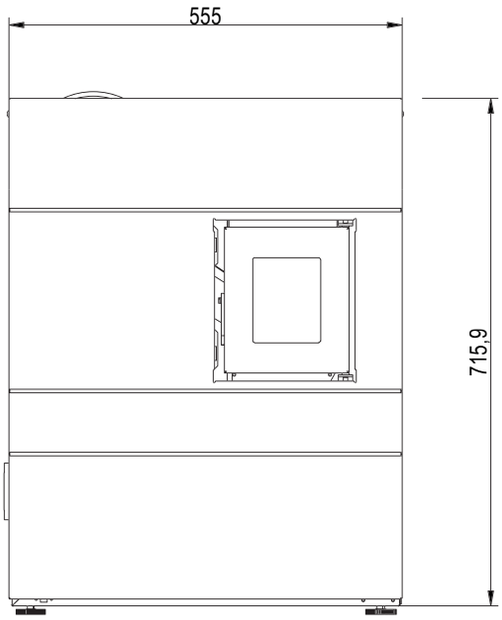

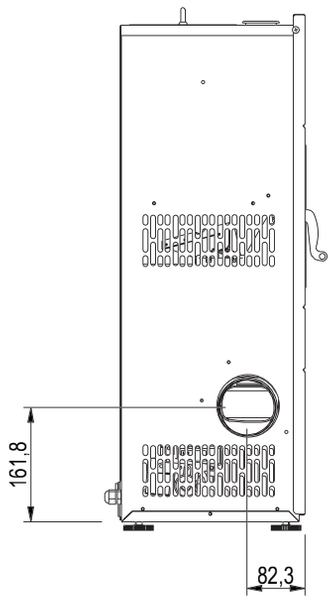

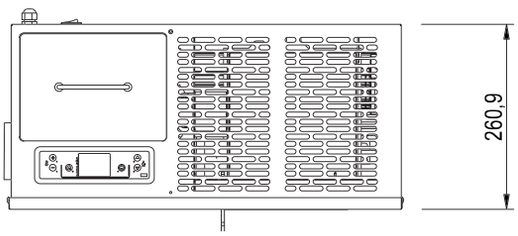

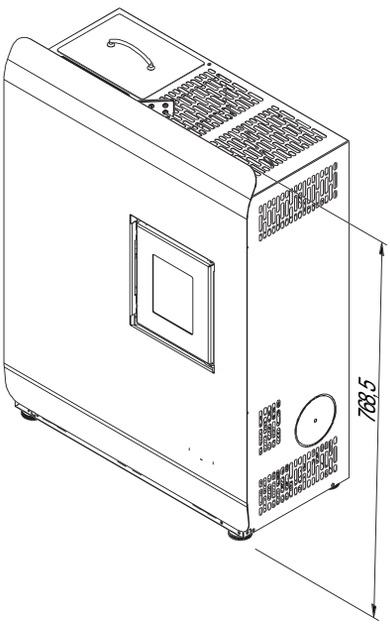

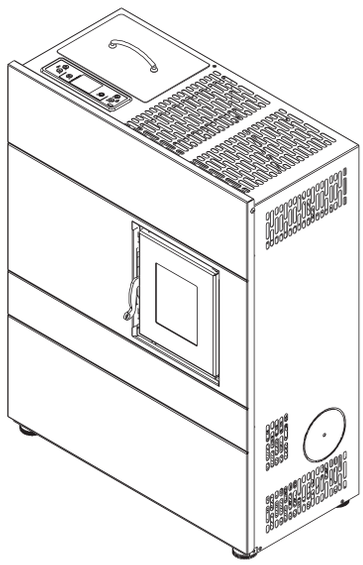

Dimensioni (**mm**)**-** Dimensions (**mm**) - Abmessungen (**mm**)
Dimensions (**mm**) - Dimensiones (**mm**)

CERTIFICAZIONI
CERTIFICATIONS
ZERTIFIZIERUNGEN
CERTIFICATIONS
CERTIFICACIONES

Dichiarazione di Conformità UE
EU Declaration of Conformity (DoC)

Il sottoscritto, **Fabio Cadel,** rappresentante la seguente
The undersigned, Fabio Cadel, representing the following

Azienda: **DELKA S.R.L**
Company name: DELKA S.R.L.

Indirizzo: Via Crevada, 63 – 31020 **Refrontolo** (TV)
Postal address: Via Crevada, 63 – 31020 Refrontolo (TV)

Numero di telefono: **0438 435535**
Telephone number: 0438 435535

Indirizzo e-mail: **amministrazione@delka.it**
E-mail address: amministrazione@delka.it

dichiara che

la **DoC** viene rilasciata sotto la propria responsabilità e si riferisce al seguente prodotto:
*declare that the **DoC** is issued under our sole responsibility and belongs to the following product:*

Descrizione prodotto: STUFA A PELLET
Apparatus model / Product: STUFA A PELLET

Marchio: TERMOVANA
Trademark: TERMOVANA

Modello/Tipo: ANNA
Model/Type: ANNA

Numero di lotto:
Batch:

Numero di serie:
Serial number:

L'oggetto della dichiarazione di cui sopra è conforme alla pertinente normativa di armonizzazione dell'Unione:

- **2014/30/UE, Direttiva Compatibilità Elettromagnetica (Direttiva EMCD)**
- **2014/35/UE, Direttiva Bassa Tensione (Direttiva LVD)**
- **2011/65/UE, Direttiva sulla restrizione dell'uso di determinate sostanze pericolose nelle apparecchiature elettriche ed elettroniche (Direttiva RoHS)**
- **2015/863/UE Direttiva Delegata recante modifica dell'allegato II della direttiva 2011/65/UE del Parlamento europeo e del Consiglio per quanto riguarda l'elenco delle sostanze con restrizioni d'uso**
- **2009/125/CE, Direttiva Ecodesign**

The object of the declaration described above is in conformity with the relevant Union harmonisation legislation:

- **2014/30/EU ElectroMagnetic Compatibility Directive (EMCD)**
- **2014/35/EU Low Voltage Directive (LVD)**
- **2011/65/EU Restriction of the use of certain hazardous substances Directive (RoHS Directive)**
- **2015/863/EU Delegated Directive amending Annex II of Directive 2011/65 / EU of the European Parliament and of the Council regarding the list of substances with usage restrictions**
- ***2009/125/EC Directive, Ecodesign (if the related regulation is fulfilled)***

Sono state applicate le seguenti norme armonizzate e/o regolamenti:
The following harmonised standards and/or regulations have been applied:

EN 55014-1 EN 55014-2 EN 61000-3-2 EN 61000-3-3	EN 60335-1 EN 60335-2-102 EN 62233	EN 50581	Commission Regulation (EU) 2015/1185

Luogo: Refrontolo (TV)
Place: Refrontolo (TV)

Data: 21/06/2020
Date

Firma
Sign

Funzione TITOLARE
Position

1/1

DICHIARAZIONE DI PRESTAZIONE
DECLARATION OF PERFORMANCE

Dichiarazione di prestazione in accordo con il Regolamento (UE) 305/2011
Declaration of performance according to Regulation (EU) 305/2011

DoP n° [020-2020/04/10]

1 Codice di identificazione unico del prodotto-tipo:
Unique identification code of the product type: **ANNA**

- Apparecchio per il riscaldamento domestico, senza acqua, alimentato a pellet di legno:
- **EN 14785:2006**

- ***Residential space heating appliance without water fired by wood pellets:***
- **EN 14785:2006**

2 Numero di tipo, lotto, serie o qualsiasi altro elemento che consenta l'identificazione del prodotto da costruzione ai sensi dell'articolo 11, paragrafo 4: ANNA
Type, batch or serial number or any other element allowing identification of the construction product as required under Article 11(4): **ANNA**

3 Uso o usi previsti del prodotto da costruzione, conformemente alla relativa specifica tecnica armonizzata, come previsto dal fabbricante:
Intended use or uses of the construction product, in accordance with the applicable harmonised technical specification, as foreseen by the manufacturer:
Apparecchio per il riscaldamento domestico, senza acqua, alimentato a pellet di legno;
Residential space heating appliance without water fired by wood pellets;

4 Nome, denominazione commerciale registrata o marchio registrato e indirizzo del fabbricante ai sensi dell'articolo 11, paragrafo 5:
Name, registered trade name or registered trade mark and contact address of the manufacturer as required pursuant Article 11(5):

- **TERMOVANA;**
- **DELKA S.r.l. - Via Crevada, 63 – 31020 Refrontolo (Treviso);**

5 Se opportuno, nome e indirizzo del mandatario il cui mandato copre i compiti di cui all'Articolo 12, paragrafo 2: N.A.
Where applicable, name and contact address of the authorised representative whose mandate covers the tasks specified in Article 12(2): N.A.

6 Sistema o sistemi di valutazione e verifica della costanza della prestazione del prodotto da costruzione di cui all'allegato V: Sistema 3 e 4
System or systems of assessment and verification of constancy of performance of the construction product as set out in Annex V: System 3 and 4

7 Nel caso di una dichiarazione di prestazione relativa ad un prodotto da costruzione che rientra nell'ambito di applicazione di una norma armonizzata:
In case of the declaration of performance concerning a construction product covered by a harmonised standard:

DICHIARAZIONE DI PRESTAZIONE
DECLARATION OF PERFORMANCE

8 L' organismo notificato TÜV Rheinland Energy GmbH (NB 2456) ha determinato il prodotto-tipo in base a prove di tipo secondo il sistema 3 ed ha rilasciato il rapporto di prova K20602020E6 ;

The notified laboratory TÜV Rheinland Energy GmbH (NB 2456) performed the determination of the product type on the basis of type testing under system 3 and issued test report **K20602020E6** ;

Prestazione dichiarata / *Declared performance*

Specifica tecnica armonizzata: ***Harmonized technical specification:***	**EN 14785:2006**
Caratteristiche Essenziali ***Essential characteristics***	**Prestazione / *Performance***
Sicurezza antincendio / Fire safety	
Reazione al fuoco / *Reaction to fire*	A1
Distanza da materiali combustibili *Distance to combustible materials*	Minime distanze / *Minimum distances* (mm): posteriore / *rear* = [50] lati / *sides* = [200] frontale / *front* = [1000]
Rischio di fuoriuscita di braci incandescenti *Risk of burning fuel falling out*	Passa / *Pass*
Emissione di prodotti della combustione ***Emission of combustion products***	CO [0,014] % Alla potenza termica nominale / *Nominal heat output* CO [0.008] % Alla potenza termica ridotta / *Reduced heat output*
Temperatura superficiale / *Surface temperature*	Passa / *Pass*
Sicurezza elettrica / *Electrical safety*	Passa / *Pass*
Pulizia / *Cleanability*	Passa / *Pass*
Pressione massima di esercizio ***Maximum operating pressure***	-NPD- (nessuna prestazione determinata)
Temperatura fumi a potenza termica nominale ***Flue gas temperature at nominal heat output***	T 190,7°C
Resistenza meccanica (per sopportare un camino/una canna fumaria) ***Mechanical resistance(to carry a chimney/flue)***	NPD {Nessuna Prestazione Determinata}
Potenza termica nominale / *Nominal heat output* Potenza termica resa in ambiente / *Room heating output* Potenza termica ceduta all'acqua / *Water heating output*	[4,7] kW [4,7] kW [NPD] kW
Rendimento ***Efficiency***	Ƞ [87,3] % Alla potenza termica nominale / *Nominal heat output* Ƞ [91,8] % Alla potenza termica ridotta / *Reduced heat output*

9 La prestazione del prodotto di cui ai punti 1 e 2 è conforme alla prestazione dichiarata di cui al punto 8. Si rilascia la presente dichiarazione di prestazione sotto la responsabilità esclusiva del fabbricante di cui al punto 4.

The performance of the product identified in points 1 and 2 is in conformity with the declared performance in point 8. This declaration of performance is issued under the sole responsibility of the manufacturer identified in point 4.

Firmato a nome e per conto del fabbricante da Fabio Cadel (Amministratore).
Signed for and on behalf of the manufacturer Fabio Cadel (CEO).

Luogo: Refrontolo (TV)
Place: Refrontolo (TV)

Data: 10/04/2020
Date: 10/04/2020

Firma
Sign.

DELKA SRL
Via Crevada, 63
31020 Refrontolo (TV)
P.I. 04564880260 - REA: TV-360289
Tel. 0438 435535

TERMOVANA by DELKA srl
Via Crevada, 63
31020 Refrontolo (TV) Italy
Tel. +39 0438 1672066
Fax +39 0438 1672067
e-mail: info@termovana.it
www.termovana.it

ANNA - 09/2020 - TV - ITALY

La Ditta DELKA non si assume alcuna responsabilità per eventuali errori del presente opuscolo e si ritiene libera di variare senza preavviso le caratteristiche dei propri prodotti.

DELKA accepts no liability for any mistakes in this handbook and is free to modify the features of its products without prior notice.

Die Firma DELKA übernimmt für eventuelle Fehler in diesem Heft keine Verantwortung und behält sich das Recht vor, die Eigenschaften ihrer Produkte ohne Vorbescheid zu ändern.

DELKA décline toute responsabilité en cas d'erreurs dans la présente documentation et conserve la faculté de modifier sans préavis les caractéristiques de l'appareil.

La empresa DELKA no se responsabiliza de los errores eventuales de este manual y tiene el derecho de modificar sin previo aviso las características de sus productos.